www.ilmkidunya.com

UNIT 04

Differential Equations

INTRODUCTION

- The idea of differential equations was first proposed by Isaac Newton and Gottfried Leibniz during the development of calculus. The term "differential equation" was introduced by Leibniz in 1676. In the 18th century, mathematicians like Euler and Lagrange made significant contributions to the theory of these equations.
- Over the centuries, research conducted by hundreds of mathematicians, physicists, economists, chemists and other scientists around the world has broadened the range of applications and methods to solve differential equations.
- Differential equations are generally classified into two broad categories: ordinary differential equations and partial differential equations. In this unit, we shall study only ordinary differential equations. For example, if a particle covers a distance s in time t, then its velocity v and acceleration a can be represented by the differential equations as follows:

$$v = \frac{ds}{dt} \text{ and } a = \frac{dv}{dt}$$

- To begin our study with this important topic, we will first define differential equation and classify their various types. Unless otherwise stated, the term differential equation used in this unit will refer to an ordinary differential equation.

Content Outline

- Differential equations: Definition, Order and Degree
- Construction of First-Order Differential Equations from Practical Situations

DIFFERENTIAL EQUATIONS: DEFINITION, ORDER AND DEGREE

Definition: An equation that involves at least one derivative of a dependent variable with respect to an independent variable is called a **differential equation**.

For example:

(i) $\frac{dy}{dx} + y\cos y = \sin x$ (ii) $\frac{d^2y}{dx^2} + xy\left(\frac{dy}{dx}\right)^2 = 0$ (iii) $\sqrt{\frac{dy}{dx}} = \frac{d^2y}{dx^2}$

(iv) $\frac{d^2y}{dx^2} + 1 = \cos\left(\frac{d^3y}{dx^3}\right)$ (v) $\sqrt{xy}\frac{dy}{dx} + \left(\frac{dy}{dx}\right)^2 = \sin y$ (vi) $\left(\frac{d^2y}{dx^2}\right)^3 + \frac{dy}{dx} = 0$

Definition: The **order of a differential equation** is the order of the highest derivative that appears in the differential equation. For example, the order of the equations (i) and (v) is 1, the order of equations (ii), (iii) and (vi) is 2, whereas equation (iv) has order 3.

Definition: A differential equation of order 1 is called **first-order differential equation**, such as (i) and (v).

Definition: If the differential equation is written as a polynomial in derivatives, then the greatest exponent of the highest-order derivative appearing in the equation is called its **degree**. Otherwise, the degree of differential equation is undefined. For example, degree of differential equations (i) and (ii) is 1, degree of differential equation (v) is 2 and the differential equation (vi) has degree 3. Since the differential equations (iii) and (iv) are not written as polynomials in derivatives, their degree is undefined.

Definition: A differential equation of degree 1 is called **first-degree differential equation**, such as (i) and (ii).

www.ilmkidunya.com

www.ilmkidunya.com

Note

Degree applies only to the differential equations written already as polynomial in derivatives. For example, the degree of the differential equation (iii) is clearly undefined. After squaring both sides, the degree of resulting equation $\frac{dy}{dx} = \left(\frac{d^2y}{dx^2}\right)^2$ is 2. However, the degree of the original equation remains undefined.

CONSTRUCTION OF FIRST-ORDER DIFFERENTIAL EQUATIONS FROM PRACTICAL SITUATIONS

First-order differential equations model problems where the rate of change of a quantity depends on the quantity itself or on time. For example, population growth or decay, Newton's law of cooling or heating, electric circuits, economic models and radioactive decay etc.

Population Growth/Decay

Situation: The rate of change of population is proportional to the population itself.

Mathematical Model:

Let P represent the population at time t. Since the rate of change of population is proportional to the population at that time, we can write:

$$\frac{dP}{dt} \propto P$$

If k is the constant of proportionality, this becomes:

$$\boxed{\frac{dP}{dt} = kP}$$

This is a first order differential equation.

Growth and decay

Growth refers to an increase in the value of a quantity, while Decay refers to a decrease in its value. These processes are commonly used to model real-life situations such as population growth and radioactive decay.

Observation: From this equation, we observe:

(i) If $k > 0$, the population increases (growth). (ii) If $k < 0$, the population decreases (decay).

(iii) If $k = 0$, population remains constant.

By solving this differential equation, we can find the population at any specific time t.

Temperature Problem (Cooling/Heating Law)

Situation: The rate of change of body's temperature with respect to time is proportional to the difference between body's temperature and the surrounding temperature.

Mathematical Model:

Let T represent the temperature of a body at time t, and let T_s be the constant temperature of the surrounding medium. According to Newton's law of cooling (or heating):

$$\frac{dT}{dt} \propto (T_s - T)$$

Introducing a constant of proportionality $k > 0$, the relation becomes:

$$\boxed{\frac{dT}{dt} = k(T_s - T)}$$

Observations:

(i) If $T < T_s$, the body is warming up and $\frac{dT}{dt}$ is positive.

(ii) If $T > T_s$, the body is cooling down and $\frac{dT}{dt}$ is negative.

By solving this differential equation, we can find the temperature T of the body at any time t.

Inflation/Deflation Problem in Economics

In this model, we construct a first-order differential equation to describe how the price of a good changes over time due to inflation or deflation.

Situation: The rate of change of price is proportional to the current price.

www.ilmkidunya.com

www.ilmkidunya.com

Mathematical Model:

Let P represent the price of a good at time t. Then,

$$\frac{dP}{dt} \propto P$$

Let k be the constant of proportionality representing the rate of inflation (when $k > 0$) or deflation (when $k < 0$), then the desired differential equation can be written as:

$$\boxed{\frac{dP}{dt} = kP}$$

Inflation/Deflation

Inflation means the price of goods is increasing over time, while **deflation** means the price of goods is decreasing over time.

Flow of Electricity in Series Circuits

In daily life, many problems involve the current flowing in series circuits. Here, we discuss two simple cases connected to first-order differential equations.

(i) Charging a Capacitor Through a Resistor (RC Circuit Model)

Situation: An RC circuit consists of a resistor of resistance R ohms and a capacitor of capacitance C farad connected in a series with a DC voltage source of constant emf V_S volts. (see Figure 4.1).

At time $t = 0$, the switch is closed, and the capacitor begins to charge.

Let q be the charge on the capacitor at time t, and $I = \frac{dq}{dt}$ the current flowing through the circuit.

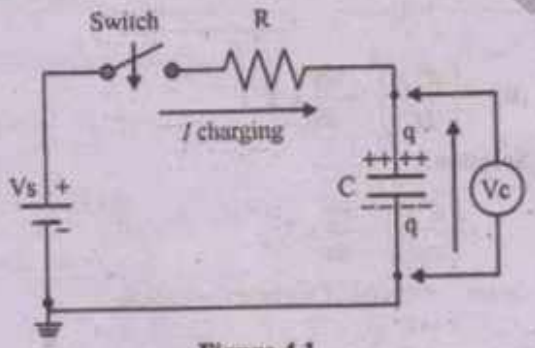

Figure 4.1

Mathematical Model:

The voltage across the capacitor is:

$$V_C = \frac{q}{C}$$

According to Ohm's law, the voltage across the resistor is:

$$V_R = IR$$

By Kirchhoff's voltage law, the sum of voltages across the resistor and capacitor is equal to the total voltage from the battery. The source voltage denoted by V_S that is given as:

$$V_S = V_R + V_C$$

$$V_S = IR + \frac{q}{C}$$

Substituting $I = \frac{dq}{dt}$, the equation becomes:

$$R\frac{dq}{dt} + \frac{q}{C} = V_S \text{ or simply,}$$

$$\boxed{RC\frac{dq}{dt} = CV_S - q}$$

(ii) Growth of Current in an RL Circuit

Situation: An RL circuit consists of a resistor of resistance R ohms and an inductor of inductance L henries connected in a series with a DC voltage source of constant emf V_S volts. The initial current is assumed to be zero (see Figure 4.2).

At time $t = 0$, the switch is closed and the current through the inductor begins to grow. Let I be the current flowing through the inductor at time t.

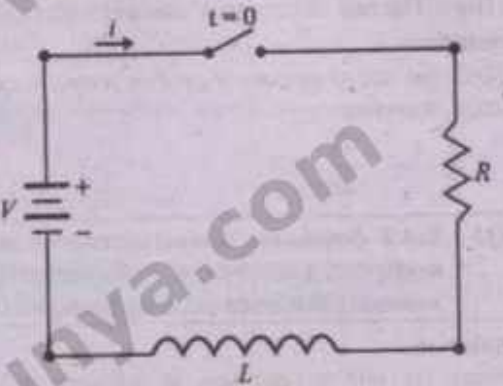

Figure 4.2

Mathematical Model

The voltage across the inductor is:

$$V_L = L\frac{dI}{dt}$$

According to Ohm's law, the voltage across the resistor is:

$$V_R = RI$$

By Kirchhoff's voltage law, the sum of voltages across the resistor and inductor equals to the applied voltage:

$$V_S = V_L + V_R$$

$$L\frac{dI}{dt} + RI = V_S$$

In this way, differential equation is:

$$\boxed{L\frac{dI}{dt} = V_S - RI}$$

www.ilmkidunya.com

www.ilmkidunya.com

EXERCISE 4.1

Q1. Write the order and degree (if defined) of the following differential equations:

(i) $\frac{d^3y}{dx^2}+7\frac{d^2y}{dx^2}-9xy\frac{dy}{dx}+x^2y=0$

Solution:

$$\frac{d^3y}{dx^2}+7\frac{d^2y}{dx^2}-9xy\frac{dy}{dx}+x^2y=0$$

Order = Order of highest derivative
= 3

Degree = Greatest exponent of highest order derivative
= 1

(ii) $\left(\frac{d^2y}{dx^2}\right)^3+\frac{dy}{dx}=1$

Solution:

$$\left(\frac{d^2y}{dx^2}\right)^3+\frac{dy}{dx}=1$$

Order = Order of highest derivative
= 2

Degree = Greatest exponent of highest order derivative
= 3

(iii) $\frac{d^2y}{dx^2}+\sin\left(\frac{dy}{dx}\right)=0$

Solution:

$$\frac{d^2y}{dx^2}+\sin\left(\frac{dy}{dx}\right)=0$$

Order = Order of highest derivative
= 2

Degree = Not defined $\because$ $\frac{dy}{dx}$ appears inside the sine function.

(iv) $\frac{dy}{dx}+e^y\sin(x)=0$

Solution:

$$\frac{dy}{dx}+e^y\sin(x)=0$$

Order = Order of highest derivative
= 1

Degree = Greatest exponent of highest order derivative
= 1

(v) $\cos x\left(\frac{d^2y}{dx^2}\right)^{\frac{1}{3}}+\frac{dy}{dx}+y=0$

Solution:

$$\cos x\left(\frac{d^2y}{dx^2}\right)^{\frac{1}{3}}+\frac{dy}{dx}+y=0$$

Order = Order of highest derivative
= 2

Degree = Not defined

Q2. Let A denote the amount of money deposited in a bank at time t, which grows over time with constant compound interest rate $r > 0$. Construct a differential equation which represents the growth of amount over time.

(Hint: The rate of change of amount with respect to time is proportional to amount itself.)

Solution:

Since the rate of amount w.r.t 't' is proportional to amount itself, therefore

$$\frac{dA}{dt} \propto A$$

$$\frac{dA}{dt} = rA,$$ where r is the constant of proportionality and $r > 0$

$$\boxed{\frac{dA}{dt} - rA = 0}, \text{ where } r > 0$$

Q3. Let T denote the temperature of a body at time t. Suppose that the effect of the surrounding medium is negligible. Construct a differential equation that represents the temperature of the body at any time t, assuming the body is losing heat due to some internal processes.

Solution:

Since the rate of decrease in temperature w.r.t 't' is proportional to temperature itself, so

$$\frac{dT}{dt} \propto T$$

$$\Rightarrow \quad \frac{dT}{dt} \propto -T$$

$$\frac{dT}{dt} = -kT,$$ where k is the constant of proportionality and $k > 0$

$$\boxed{\frac{dT}{dt} + kT = 0, k > 0}$$

www.ilmkidunya.com

www.ilmkidunya.com

Q4. Let N denote the amount of radioactive substance present at time t. Construct a differential equation that models the radioactive decay of the substance.

(**Hint:** Radioactive decay is a natural process by which an unstable atomic nucleus loses energy by emitting radiation. The rate at which a radioactive substance decays is proportional to the amount of the substance present at any given time.)

Solution:

Since, the rate of decay of radioactive substance is proportional to the amount of the substance present at that time, therefore

$$\frac{dN}{dt} \propto N$$

$$\Rightarrow \quad \frac{dN}{dt} \propto -N$$

$$\frac{dN}{dt} = -kN, \quad \text{where } k \text{ is the constant of proportionality and } k > 0$$

$$\boxed{\frac{dN}{dt} + kN = 0, k > 0}$$

Q5. For an RC circuit, recall the differential equation representing the charging of a capacitor. Deduce the differential equation that represents the discharging of the capacitor.

Solution:

For an RC circuit, the differential equation for charging of capacitor is

$$RC\frac{dq}{dt} = CV_s - q \qquad \ldots(1)$$

where V_s = constant voltage source
R = resistance
C = capacitance
$q(t)$ = charge on the capacitor at time 't'

During discharging, the voltage source is disconnected, therefore $V_s = 0$

$$\text{Eq. (1)} \Rightarrow RC\frac{dq}{dt} = C(0) - q$$

$$RC\frac{dq}{dt} = -q$$

Dividing both sides by RC

$$\boxed{\frac{dq}{dt} = \frac{-1}{RC}q}$$

Q6. For an RL circuit, recall the differential equation representing the charging of an inductor. Deduce the differential equation that represents the discharging of the inductor.

Solution:

For an RL circuit, the differential equation for charging of inductor is

$$L\frac{dI}{dt} = V_s - RI \qquad \ldots(1)$$

where $I(t)$ = current through the inductor
L = inductance
R = resistance
V_s = constant voltage source

During discharging, the voltage source is disconnected, therefore $V_s = 0$

$$\text{Eq. (1)} \Rightarrow \quad L\frac{dI}{dt} = 0 - RI$$

$$L\frac{dI}{dt} = -RI$$

Dividing both sides by L

$$\boxed{\frac{dI}{dt} = -\frac{R}{L}I}$$

Content Outline

- Solution of First-Order and First-Degree Differential Equations
- Finding General and Particular Solutions of First-Order Differential Equations

SOLUTION OF FIRST-ORDER AND FIRST-DEGREE DIFFERENTIAL EQUATIONS

General form of the first-order and first-degree differential equations.

$$\frac{dy}{dx} = f(x, y)$$

where f is a function of two variables in x and y, defined on some region of the xy-plane. It is always possible to write the above equation in differential form as follows:

$$M(x, y)dx + N(x, y)dy = 0$$

where $M(x, y)$ and $N(x, y)$ are the functions of x and y.

www.ilmkidunya.com

www.ilmkidunya.com

Examples: (i) $\frac{dy}{dx}=\frac{x+y}{y-x}$ or $(x+y)dx+(x-y)dy=0$

(ii) $\frac{dy}{dx}=\frac{x}{y}$ or $xdx+ydy=0$

Definition: A **solution** of the differential equation $\frac{dy}{dx}=f(x,y)$ is a relation $S(x,y)=0$, free from the derivative $\frac{dy}{dx}$, which satisfies the given differential equation in some region of the xy-plane.

Definition: The **general solution** of the differential equation $\frac{dy}{dx}=f(x,y)$ is the relation $S(x,y,c)=0$ containing an arbitrary constant c, which represents all possible solutions of the differential equation of this form.

- The presence of the arbitrary constant c gives a family of curves, each member of which is a solution of the differential equation.
- Some differential equation also possess solution (called singular solutions) which are not the members of this family. However, we will not study these solutions at this level.

Definition: A **particular solution** of the differential equation $\frac{dy}{dx}=f(x,y)$ is a solution that does not contain any arbitrary constant. It is obtained by assigning a specific value to the arbitrary constant appearing in the general solution.

Definition: In order to determine a particular solution from the general solution, an additional condition is required.

A condition of the form

$$y=y_0 \text{ at } x=x_0 \text{ written as } y(x_0)=y_0$$

is called an **initial value condition**.

Definition: A differential equation together with an initial value condition is called an **initial value problem (IVP)**.

Example 1: Show that the relation

$$y=cx+2 \qquad \ldots(1)$$

represents a solution of the differential equation

$$y-x=x\frac{dy}{dx}=2 \qquad \ldots(2)$$

Solution:

Differentiating equation (1) w.r.t x,

$$\frac{d}{dx}(y)=\frac{d}{dx}(cx+2)$$

$$\frac{dy}{dx}=c(1)+0$$

$$\frac{dy}{dx}=c$$

From eq. (2), we have

$$\text{L.H.S.}=y-x\frac{dy}{dx}$$

$$=(cx+2)-x(c)$$

$$=cx+2-cx$$

$$=2$$

$$=\text{R.H.S}$$

Hence, the equation (1) represents a solution of differential equation (2).

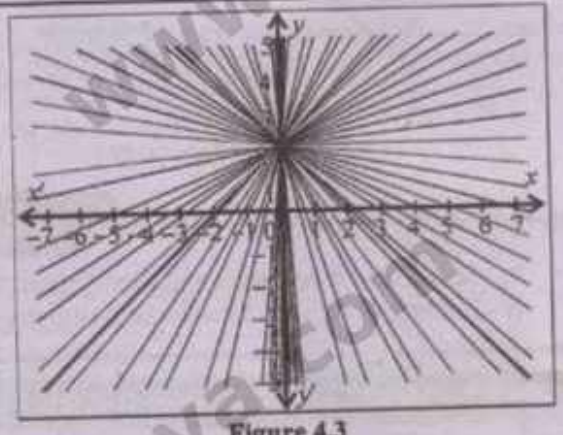

Figure 4.3

Note

The relation (1) represents the family of straight lines having y-intercept 2, where the arbitrary constant c represents the slope of each line (see Fig. 4.3, exclude y-axis because its slope is undefined).

www.ilmkidunya.com

www.ilmkidunya.com

Example 2: Show that the relation $\tan y = 10(e^x - 1)^2$ represents a particular solution for the differential equation $2e^x \tan y + (1 - e^x)\sec^2 y \frac{dy}{dx} = 0$.

Solution:

Given that:

$$\tan y = 10(e^x - 1)^2 \quad ...(1)$$

$$2e^x \tan y + (1 - e^x)\sec^2 y \frac{dy}{dx} = 0 \quad ...(2)$$

Differentiating equation (1) w.r.t x

$$\frac{d}{dx}(\tan y) = 10\frac{d}{dx}(e^x - 1)^2$$

$$\sec^2 y \frac{dy}{dx} = 10(2)(e^x - 1)^1 \cdot e^x$$

$$\sec^2 y \frac{dy}{dx} = 20e^x(e^x - 1)$$

From eq. (2), we have

$$\text{L.H.S} = 2e^x \tan y + (1 - e^x)\sec^2 y \frac{dy}{dx}$$

$$= 2e^x[10(e^x - 1)^2] + (1 - e^x)[20e^x(e^x - 1)]$$

$$= 20e^x(e^x - 1)^2 + 20e^x(e^x - 1)(1 - e^x)$$

$$= 20e^x(e^x - 1)^2 + 20e^x(e^x - 1)(-)(e^x - 1)$$

$$= 20e^x(e^x - 1)^2 - 20e^x(e^x - 1)^2$$

$$= 0 = \text{R.H.S}$$

Since, the eq. (1) has no arbitrary constant, we conclude that eq. (1) represents a particular solution of differential eq. (2).

FINDING GENERAL AND PARTICULAR SOLUTIONS OF FIRST-ORDER DIFFERENTIAL EQUATIONS

- In the previous section, we verified whether certain relations satisfy given differential equations. Now, we turn to the central task of this unit: solving first-order differential equations. We restrict ourselves to two important types of such equations: separable differential equations and homogeneous differential equations.
- Our goal is to find the general solution of a given differential equation. This often involves introducing an arbitrary constant during the process of integration. We begin the section with the method of separation of variables.

Separable Differential Equation

A first-order differential equation is called **Separable** if it can be written as:

$$\frac{dy}{dx} = g(x)h(y) \quad \text{or} \quad g(x)dx = \frac{1}{h(y)}dy \quad \because \text{if } h(y) \neq 0$$

For example, the differential equation $\frac{dy}{dx} = -\frac{x}{y}$ is separable, because it can be written as $ydy = -xdx$. However, the differential equation $\frac{dy}{dx} = \frac{x + y}{y - x}$ is not separable.

Method to Solve a Separable Differential Equation

Note that the separable differential equation:

$$\frac{dy}{dx} = g(x)h(y)$$

can be written as: $\frac{1}{h(y)}dy = g(x)dx$

Integrate both sides:

$$\int \frac{1}{h(y)}dy = \int g(x)dx$$

By solving the integrals on both sides, we obtain the general solution of separable differential equation.

www.ilmkidunya.com

www.ilmkidunya.com

Example 3: Find the general solution of the differential equation $xdx + ydy = 0$.

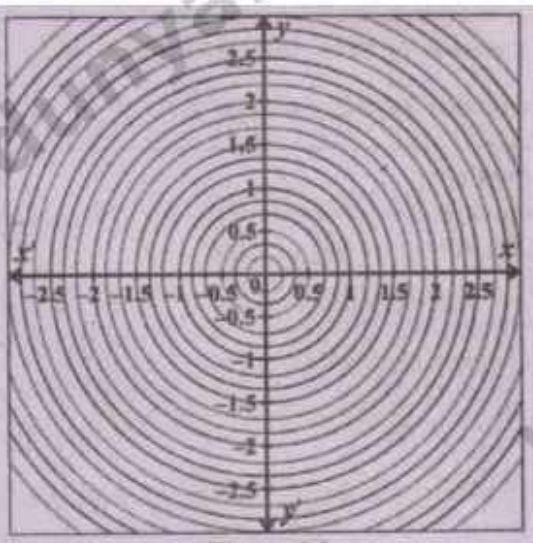

Figure 4.4

Solution:

$$x\,dx + y\,dy = 0$$

Separating the variables:

$$y\,dy = -x\,dx$$

Integrating both sides:

$$\int y dy = -\int x dx$$

$$\Rightarrow \quad \frac{y^2}{2} = -\frac{x^2}{2} + c_1$$

Multiply both sides by '2'

$$\Rightarrow \quad y^2 = -x^2 + 2c_1$$

$$\boxed{x^2 + y^2 = c}, \text{ where } c = 2c_1$$

Example 4: Solve the initial value problem: $\frac{dy}{dx} = \frac{3}{4}x^2 + x - 3;\ y(2) = 0$

Solution:

$$\frac{dy}{dx} = \frac{3}{4}x^2 + x - 3;\ y(2) = 0$$

Separating the variables:

$$dy = \left(\frac{3}{4}x^2 + x - 3\right)dx$$

Integrating both sides:

$$\int 1dy = \int\left(\frac{3}{4}x^2 + x - 3\right)dx$$

$$y = \frac{3}{4}\left(\frac{x^3}{3}\right) + \frac{x^2}{2} - 3x + c$$

$$y = \frac{1}{4}x^3 + \frac{1}{2}x^2 - 3x + c \qquad \ldots(1)$$

Using: $y(2) = 0 \Rightarrow x = 2, y = 0$

$$0 = \frac{1}{4}(2)^3 + \frac{1}{2}(2)^2 - 3(2) + c$$

$$0 = \frac{1}{4}(8) + \frac{1}{2}(4) - 6 + c$$

$0 = 2 + 2 - 6 + c \Rightarrow c = 0$ Put in eq. (1)

$$\boxed{y = \frac{1}{4}x^3 + \frac{1}{2}x^2 - 3x + 2}$$ (Required solution)

Example 5: Solve the differential equation: $2e^x \tan y dx + (1 - e^x)\sec^2 y dy = 0;\ y \in \left(-\frac{\pi}{2}, \frac{\pi}{2}\right)\ y \neq 0.$

Solution:

$$2e^x \tan y dx + (1 - e^x)\sec^2 y dy = 0$$

Separating the variables:

$$(1 - e^x)\sec^2 y\,dy = -2e^x \tan y\,dx$$

$$\frac{\sec^2 y}{\tan y}dy = \frac{-2e^x}{1 - e^x}dx$$

$$\frac{\sec^2 y}{\tan y}dy = \frac{-2e^x}{-(e^x - 1)}dx$$

Integrating both sides:

$$\int\frac{\sec^2 y}{\tan y}dy = 2\int\frac{e^x}{e^x - 1}dx$$

Remember:

Note the real logarithmic functions are defined only for the positive real numbers. If $u \leq 0$, it makes no sense to write $\ell n\ u$. Thus, for any non-zero variable u, we have $\int\frac{du}{u} = \ell n|u| + c$.

www.ilmkidunya.com

www.ilmkidunya.com

Using: $\int \frac{f'(x)}{f(x)}dx = \ln|f(x)| + c_1$

$$\ln|\tan y| = 2\ln|e^x - 1| + \ln|c_1|$$

$$\ln|\tan y| = \ln|(e^x - 1)^2| + \ln|c_1|$$

$$\ln|\tan y| = \ln|c_1(e^x - 1)^2|$$

$$\Rightarrow \quad |\tan y| = |c_1(e^x - 1)^2|$$

$$\tan y = \pm c_1(e^x - 1)^2$$

$$\tan y = c(e^x - 1)^2 \quad \text{where } c = \pm c_1$$

$$\Rightarrow \quad y = \tan^{-1}[c(e^x - 1)^2] \quad \because y \in \left(-\frac{\pi}{2}, \frac{\pi}{2}\right)$$

Note

1. While solving integrals in a differential equation, it is convenient to write the constant of integration as $\ln c$ when natural logarithmic functions are involved. This is because for a constant $c > 0$, the expression $\ln c$ still represents an arbitrary real constant.
2. Recall that a function $y = f(x)$ is said to be a one-to-one function, if for all $x_1, x_2 \in \text{Dom } f$ with $f(x_1) = f(x_2)$, we have $x_1 = x_2$.

Homogeneous Differential Equation

Definition: A first-order differential equation is called homogeneous if it can be written in the form:

$$\frac{dy}{dx} = F\left(\frac{y}{x}\right)$$

where $F\left(\frac{y}{x}\right)$ is a function of the ratio $\frac{y}{x}$ only. For example, $\frac{dy}{dx} = \frac{x^3 + xy^2}{y^3 - x^2y}$ is a homogeneous differential equation because, it can be written as:

$$\frac{dy}{dx} = \frac{\frac{x^3 + xy^2}{x^3}}{\frac{y^3 - x^2y}{x^3}} = \frac{1 + \left(\frac{y}{x}\right)^2}{\left(\frac{y}{x}\right)^3 - \left(\frac{y}{x}\right)} = F\left(\frac{y}{x}\right)$$

On the other hand, the differential equation $\frac{dy}{dx} = x + y$ is not homogeneous because $x + y$ cannot be expressed as a function of $\frac{y}{x}$.

Easy tests to identify a homogeneous differential equation:

1. Same degree Test:

Suppose $g(x, y)$ and $h(x, y)$ are polynomials in x and y. If the sum of exponents of x and y in each term of $g(x, y)$ and $h(x, y)$ is same, then the differential equation $\frac{dy}{dx} = \frac{g(x, y)}{h(x, y)}$ is homogeneous. For example, in the homogeneous differential equation:

$$\frac{dy}{dx} = \frac{x^3 + xy^2}{y^3 - x^2y}$$

each term of the numerator and denominator of the right side is of degree 3.

2. Variable Substitution Test

The differential equation $\frac{dy}{dx} = f(x, y)$ will be homogeneous if for every non-zero real number t, we have:

$$f(tx, ty) = f(x, y)$$

For example, in the homogenous differential equation $\frac{dy}{dx} = \frac{x^3 + xy^2}{y^3 - x^2y}$, we have:

$$f(x, y) = \frac{x^3 + xy^2}{y^3 - x^2y} \quad \text{and} \quad f(tx, ty) = \frac{(tx)^3 + (tx)(ty)^2}{(ty)^3 - (tx)^2(ty)} = \frac{x^3 + xy^2}{y^3 - x^2y} = f(x, y)$$

www.ilmkidunya.com

www.ilmkidunya.com

Method to Solve a Homogeneous Differential Equation

The homogeneous differential equation:

$$\frac{dy}{dx} = F\left(\frac{y}{x}\right) \quad \ldots(1)$$

can be converted into a separable differential equation in variables x and v by making the substitution:

$$y = vx \quad \ldots(2)$$

Differentiating both sides of equation (2) w.r.t:

$$\frac{dy}{dx} = v + x\frac{dv}{dx} \quad \ldots(3)$$

Substituting the values of $\frac{y}{x}$ and $\frac{dy}{dx}$ from equations (2) and (3), the equation (1) can be written as:

$$v + x\frac{dv}{dx} = F(v)$$

Rewriting, we obtain:

$$x\frac{dv}{dx} = F(v) - v$$

It becomes separable differential equation and can be written as:

$$\frac{1}{F(v)-v}dv = \frac{1}{x}dx$$

On integrating both sides:

$$\int \frac{1}{F(v)-v}dv = \int \frac{1}{x}dx$$

Note

If the equation $\frac{dy}{dx} = f(x,y)$ is homogeneous, then on substituting $y = vx$, $\frac{dy}{dx}$ is replaced by $v + x\frac{dv}{dx}$ and $f(x,y)$ can easily be simplified by replacing x with 1 and y with v. For example, in $\frac{dy}{dx} = \frac{x+y}{y-x}$, replacing x with 1 and y with v, in the right-hand side, we get $v + x\frac{dv}{dx} = \frac{1+v}{v-1}$.

By solving integrals of the above equation and then substituting back $v = \frac{y}{x}$, we obtain the general solution for the homogeneous differential equation (1).

Example 6: Find the general solution of the differential equation $\frac{dy}{dx} = \frac{x+y}{y-x}$.

Solution:

$$\frac{dy}{dx} = \frac{x+y}{y-x} \quad \text{(Homogeneous DE)}$$

Put $y = vx \Rightarrow \frac{dy}{dx} = v \cdot 1 + x\frac{dv}{dx}$

$$v + x\frac{dv}{dx} = \frac{x+vx}{vx-x}$$

Separating the variables:

$$v + x\frac{dv}{dx} = \frac{x(1+v)}{x(v-1)}$$

$$x\frac{dv}{dx} = \frac{1+v}{v-1} - v$$

$$x\frac{dv}{dx} = \frac{1+v-v(v-1)}{v-1} = \frac{1+v-v^2+v}{v-1}$$

$$x\frac{dv}{dx} = \frac{-v^2+2v+1}{v-1}$$

$$\frac{v-1}{-v^2+2v+1}dv = \frac{1}{x}dx$$

Integrating both sides:

$$-\frac{1}{2}\int \frac{-2v+2}{-v^2+2v+1}dv = \int \frac{1}{x}dx$$

Using: $\int \frac{f'(x)}{f(x)}dx = \ln|f(x)| + c_1$

$$-\frac{1}{2}\ln|-v^2+2v+1| = \ln|x| + \ln|c_1|$$

$$\ln|-v^2+2v+1| = -2\ln|c_2 x|$$

$$\ln|-v^2+2v+1| = \ln|c_1 x|^{-2}$$

$$\Rightarrow \ln|-v^2+2v+1| = \left(\frac{1}{c_1 x}\right)^2$$

$$\Rightarrow \left|-\left(\frac{y}{x}\right)^2 + 2\frac{y}{x} + 1\right| = \frac{1}{c_1^2 x^2} \qquad \because y = vx \Rightarrow v = \frac{y}{x}$$

www.ilmkidunya.com

www.ilmkidunya.com

$$\frac{|-y^2+2xy+x^2|}{x^2} = \frac{1}{c_1^2x^2}$$

$$|-y^2+2xy+x^2| = \frac{1}{c_1^2}$$

$$-y^2+2xy+x^2 = \pm\frac{1}{c_1^2}$$

$$\boxed{x^2+2xy-y^2 = c_1} \text{ where } c = \pm\frac{1}{c_1^2}$$

Example 7: The slope of tangent at any point to a family of curves $f(x, y, c)=0$ is given by the rule $m(x, y)=\frac{x^2+3y^2}{2xy}$; $x, y \neq 0$. Find particular members of the family passing through the point $P_0(2, 6)$.

Solution:

Given that:

Slope of tangent $= m(x, y)$

$$\Rightarrow \quad \frac{dy}{dx} = \frac{x^2+3y^2}{2xy} \quad \text{(Homogeneous DE)}$$

Put $y = vx \Rightarrow \frac{dy}{dx} = v\cdot 1 + x\frac{dv}{dx}$

$$v + x\frac{dv}{dx} = \frac{x^2+3(vx)^2}{2x(vx)}$$

$$v + x\frac{dv}{dx} = \frac{x^2(1+3v^2)}{2x^2v}$$

$$x\frac{dv}{dx} = \frac{1+3v^2}{2v} - v$$

$$x\frac{dv}{dx} = \frac{1+3v^2-2v^2}{2v}$$

$$x\frac{dv}{dx} = \frac{1+v^2}{2v}$$

$$\frac{2v}{1+v^2}dv = \frac{1}{x}dx$$

Integrating both sides:

$$\int\frac{2v}{1+v^2}dv = \int\frac{1}{x}dx$$

$$\ell n(1+v^2) = \ell n|x| + \ell n|c|$$

$$\ell n(1+v^2) = \ell n|cx|$$

$$\Rightarrow \quad 1+v^2 = cx$$

$$1+\left(\frac{y}{x}\right)^2 = cx \qquad \because y = vx \Rightarrow v = \frac{y}{x}$$

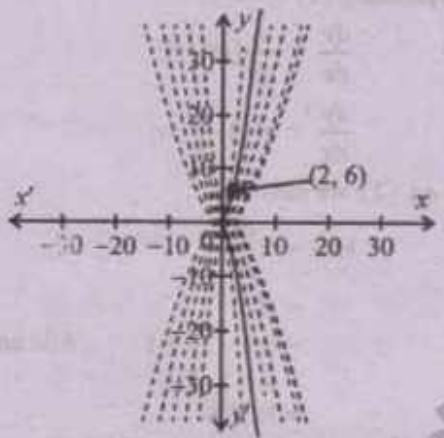

Figure 4.5

$$1+\frac{y^2}{x^2} = cx$$

$$\frac{x^2+y^2}{x^2} = cx$$

$$x^2+y^2 = cx^3$$

$$y^2 = cx^3 - x^2 \quad \ldots(1) \text{ (General solution)}$$

For particular family of member passing through the point $P_0(2, 6)$

Put $x = 2, y = 6$

$$\Rightarrow \quad 6^2 = c(2)^3 - 2^2 \qquad \Rightarrow 36+4 = 8c$$

$$8c = 40 \Rightarrow c = \frac{40}{8} \qquad \Rightarrow c = 5 \text{ Put in eq. (1)}$$

$$y^2 = 5x^3 - x^2 \text{ (Required particular solution)}$$

Note

Few members of the family (2) are given in Figure 4.5, where the bold curve represents the particular member $y^2 = 5x^3 - x^2$.

www.ilmkidunya.com

www.ilmkidunya.com

EXERCISE 4.2

Q1. Show that each of the following relation written against the differential equation is its solution:

(i) $x\frac{dy}{dx}=1+y\,;\,y=cx-1$

Solution:

Given that:

$$y=cx-1 \qquad ...(1)$$

$$x\frac{dy}{dx}=1+y \qquad ...(2)$$

Differentiating (1) w.r.t 'x'

$$\frac{dy}{dx}=\frac{d}{dx}(cx-1)$$

$$\frac{dy}{dx}=c(1)-0=c$$

From eq. (2), we have

$$\text{L.H.S}=x\frac{dy}{dx}$$
$$=x(c)$$
$$=(cx-1)+1 \qquad \text{Add and subtract '1'}$$
$$=y+1 \qquad \text{Using (1)}$$
$$=\text{R.H.S}$$

Hence, the eq. (1) is a solution of *DE* (2).

(ii) $x^2(2y+1)\frac{dy}{dx}=1;\,y^2+y=5-\frac{1}{x}$

Solution:

Given that

$$y^2+y=5-\frac{1}{x} \qquad ...(1)$$

$$x^2(2y+1)\frac{dy}{dx}=1 \qquad ...(2)$$

Differentiating (1) w.r.t 'x'

$$\frac{d}{dx}(y^2+y)=\frac{d}{dx}(5-x^{-1})$$

$$2y\frac{dy}{dx}+\frac{dy}{dx}=0+1x^{-2}$$

$$(2y+1)\frac{dy}{dx}=\frac{1}{x^2}$$

$$\frac{dy}{dx}=\frac{1}{x^2(2y+1)}$$

From eq. (2), we have

$$\text{L.H.S}=x^2(2y+1)\frac{dy}{dx}$$
$$=x^2(2y+1)\left[\frac{1}{x^2(2y+1)}\right]$$
$$=1$$
$$=\text{R.H.S}$$

Hence, the eq. (1) is a solution of *DE* (2).

(iii) $\frac{ds}{dt}=e^t(s^2+1);\,s=\tan(e^t-10)$

Solution:

Give that:

$$s=\tan(e^t-10) \qquad ...(1)$$

$$\frac{ds}{dt}=e^t(s^2+1) \qquad ...(2)$$

Differentiating (1) w.r.t 'x'

$$\frac{ds}{dt}=\frac{d}{dt}[\tan(e^t-10)]$$

$$\frac{ds}{dt}=\sec^2(e^t-10)\cdot e^t$$

From eq. (2), we have

$$\text{L.H.S}=\frac{ds}{dt}$$
$$=e^t\cdot\sec^2(e^t-10)$$
$$=e^t[1+\tan^2(e^t-10)] \qquad \because \sec^2\theta=1+\tan^2\theta$$
$$=e^t(1+s^2) \qquad \text{Using eq. (1)}$$
$$=\text{R.H.S}$$

Hence, the eq. (1) is a solution of *DE* (2).

(iv) $x\tan y\frac{dy}{dx}-1=0;\,x\cos y=b$

Solution:

Given that:

$$x\cos y=b \qquad ...(1)$$

$$x\tan y\frac{dy}{dx}-1=0 \qquad ...(2)$$

Differentiating (1) w.r.t 'x'

$$\frac{d}{dx}(x\cos y)=\frac{d}{dx}(b)$$

$$x\frac{d}{dx}(\cos y)+\cos y\frac{d}{dx}(x)=0$$

www.ilmkidunya.com

www.ilmkidunya.com

$$-x\sin y\frac{dy}{dx}+\cos y=0$$

$$x\sin y\frac{dy}{dx}=\cos y$$

$$\frac{dy}{dx}=\frac{\cos y}{x\sin y}$$

$$\frac{dy}{dx}=\frac{1}{x}\cdot\cot x$$

From eq. (2), we have

$$\text{L.H.S} = x\tan y\frac{dy}{dx}-1$$

$$= x\tan y\left[\frac{1}{x}\cot y\right]-1$$

$$= \tan y\cdot\frac{1}{\tan y}-1$$

$$= 1-1=0=\text{R.H.S}$$

Hence, the eq. (1) is a solution of *DE* (2).

Q2. Which of the following differential equations are separable and which of them are homogeneous?

(i) $x\frac{dy}{dx}=1+y$

Solution:

$x\frac{dy}{dx}=1+y$ (Separable)

Reason:

$$xdy=(1+y)dx$$

$$\frac{1}{1+y}dy=\frac{1}{x}dx$$

(ii) $x^2(2y+1)dy-dx=0$

Solution:

$x^2(2y+1)dy-dx=0$ (Separable)

Reason:

$$x^2(2y+1)dy=dx$$

$$(2y+1)dy=\frac{1}{x^2}dx$$

(iii) $(2xy+x^2)dy-y^2dx=0$

Solution:

$(2xy+x^2)dy-y^2dx=0$ (Homogeneous)

Reason:

$$(2xy+x^2)dy=y^2dx$$

$$\frac{dy}{dx}=\frac{y^2}{2xy+x^2}$$

Dividing up and down by x^2

$$\frac{dy}{dx}=\frac{\frac{y^2}{x^2}}{\frac{2xy}{x^2}+\frac{x^2}{x^2}}$$

$$\frac{dy}{dx}=\frac{\left(\frac{y}{x}\right)^2}{2\left(\frac{y}{x}\right)+1}$$

$$\Rightarrow \quad \frac{dy}{dx}=F\left(\frac{y}{x}\right)$$

(iv) $\frac{dy}{dx}=e^{x-y}$

Solution:

$\frac{dy}{dx}=e^{x-y}$ (Separable)

Reason:

$$\frac{dy}{dx}=e^x\cdot e^{-y}$$

$$\frac{1}{e^{-y}}dy=e^xdx$$

$$e^ydy=e^xdx$$

(v) $\frac{dT}{dt}+k(T-T_m)=0$

Solution:

$\frac{dT}{dt}+k(T-T_m)=0$ (Separable)

Reason:

$$\frac{dT}{dt}=-k(T-T_m)$$

$$dT=-k(T-T_m)dt$$

$$\frac{1}{T-T_m}dT=k\,dt$$

(vi) $\frac{dy}{dx}=\ell n(x)-\ell n(y);x>0,y>0$

Solution:

$\frac{dy}{dx}=\ell n(x)-\ell n(y);x>0,y>0$ (Homogeneous)

Reason:

$$\frac{dy}{dx}=-(-\ell n\,x+\ell n\,y)$$

$$=-\ell n\left(\frac{y}{x}\right)$$

$$\Rightarrow \quad \frac{dy}{dx}=F\left(\frac{y}{x}\right)$$

www.ilmkidunya.com

www.ilmkidunya.com

Find the general solutions of the differential equations given in problems (3 to 21):

Q3. $\frac{dy}{dx}=\left(\frac{1-y^2}{1-x^2}\right)^{\frac{1}{2}}$

Solution:

$$\frac{dy}{dx}=\left(\frac{1-y^2}{1-x^2}\right)^{\frac{1}{2}}$$

Separating the variables:

$$dy=\frac{\sqrt{1-y^2}}{\sqrt{1-x^2}}dx$$

$$\frac{1}{\sqrt{1-y^2}}dy=\frac{1}{\sqrt{1-x^2}}dx$$

Integrating both sides:

$$\int\frac{1}{\sqrt{1-y^2}}dy=\int\frac{1}{\sqrt{1-x^2}}dx$$

$$\sin^{-1}y=\sin^{-1}x+c$$

$$\sin^{-1}y-\sin^{-1}x=c \text{ (General solution)}$$

Q4. $\frac{dy}{dx}=e^{x-y}$

Solution:

$$\frac{dy}{dx}=e^{x-y}$$

Separating the variables:

$$\frac{dy}{dx}=e^x\cdot e^{-y}$$

$$\frac{1}{e^{-y}}dy=e^x dx$$

$$e^y dy=e^x dx$$

Integrating both sides:

$$\int e^y dy\ \int e^x dx$$

$$e^y\cdot 1=e^x\cdot 1+c$$

$$e^y=e^x+c \text{ (General solution)}$$

Q5. $\frac{dy}{dx}=\sqrt{y}\cos^2\sqrt{y}$

Solution:

$$\frac{dy}{dx}=\sqrt{y}\cos^2\sqrt{y}$$

Separating the variables:

$$\frac{1}{\sqrt{y}\cos^2\sqrt{y}}dy=1dx$$

$$\sec^2\sqrt{y}\frac{1}{\sqrt{y}}dy=dx$$

Let $u=\sqrt{y} \Rightarrow du=\frac{1}{2\sqrt{y}}dy \Rightarrow 2du=\frac{1}{\sqrt{y}}dy$

$$\sec^2 u\cdot 2du=dx$$

Integrating both sides:

$$2\int\sec^2 u\cdot 2du=\int 1dx$$

$$2\tan u=x+c$$

$$2\tan\sqrt{y}=x+c \text{ (General solution) } \because u=\sqrt{y}$$

Q6. $\sqrt{x}\frac{dy}{dx}=e^{y+\sqrt{x}}$

Solution:

$$\sqrt{x}\frac{dy}{dx}=e^{y+\sqrt{x}}$$

Separating the variables:

$$\sqrt{x}dy=e^y\cdot e^{\sqrt{x}}dx$$

$$\frac{1}{e^y}dy=e^{\sqrt{x}}\cdot\frac{1}{\sqrt{x}}dx$$

Let $u=\sqrt{x} \Rightarrow du=\frac{1}{2\sqrt{x}}dx \Rightarrow 2du=\frac{1}{\sqrt{x}}dx$

$$e^{-y}dy=e^u\cdot 2du$$

Integrating both sides:

$$\int e^{-y}dy=2\int e^u\cdot 2du$$

$$\frac{e^{-y}}{-1}=2e^u+c_1$$

Multiply both sides by '-1'

$$e^{-y}=-2e^u-c_1$$

$$e^{-y}=-2e^{\sqrt{x}}-c \text{ where } u=\sqrt{x},\ c=-c_1$$

$$e^{-y}+2e^{\sqrt{x}}=c \text{ (General solution)}$$

Q7. $\frac{dy}{dx}=2x\sqrt{1-y^2}$

Solution:

$$\frac{dy}{dx}=2x\sqrt{1-y^2}$$

Separating the variables:

$$\frac{1}{\sqrt{1-y^2}}dy=2x\,dx$$

Integrating both sides:

$$\int\frac{1}{\sqrt{1-y^2}}dy=2\int x\,dx$$

www.ilmkidunya.com

www.ilmkidunya.com

$$\sin^{-1} y = 2\frac{x^2}{2} + c$$

$$y = \sin(x^2 + c) \text{ (General solution)}$$

Q8. $\frac{dy}{dx} = \frac{1+x}{(1-x)(1+x^2)}$

Solution:

$$\frac{dy}{dx} = \frac{1+x}{(1-x)(1+x^2)}$$

$$= \frac{1+x^2+x-x^2}{(1-x)(1+x^2)}$$

$$= \frac{(1+x^2)+x(1-x)}{(1-x)(1+x^2)}$$

$$= \frac{1+x^2}{(1-x)(1+x^2)} + \frac{x(1-x)}{(1-x)(1+x^2)}$$

$$\frac{dy}{dx} = \frac{1}{1-x} + \frac{x}{1+x^2}$$

Separating the variables:

$$dy = \left(\frac{1}{1-x} + \frac{x}{1+x^2}\right)dx$$

Integrating both sides:

$$\int 1dy = \int \frac{1}{1-x}dx + \int \frac{x}{1+x^2}dx$$

$$\int 1dy = -\int \frac{-1}{1-x}dx + \frac{1}{2}\int \frac{2x}{1+x^2}dx$$

$$y = -\ln|1-x| + \frac{1}{2}\ln(1+x^2) + \ln|c|$$

$$= -\ln|1-x| + \ln(1+x^2)^{\frac{1}{2}} + \ln|c|$$

$$y = \ln\left|\frac{c\sqrt{1+x^2}}{1-x}\right| \text{ (General solution)}$$

Q9. $x^2dx + (1-x^2)dy = 0$

Solution:

$$x^2dx + (1-x^2)dy = 0$$

Separating the variables:

$$(1-x^2)dy = -x^2dx$$

$$dy = \frac{-x^2}{1-x^2}dx$$

$$dy = \frac{x^2}{x^2-1}dx$$

$$dy = \frac{(x^2-1)+1}{x^2-1}dx$$

$$dy = \left(\frac{x^2-1}{x^2-1} + \frac{1}{x^2-1}\right)dx$$

$$= 1dx + \frac{1}{x^2-1}dx$$

Integrating both sides:

$$\int 1dy = \int 1dx + \int \frac{1}{x^2-1^2}dx$$

Formula: $\int \frac{1}{a^2-x^2}dx = \frac{1}{2a}\ln\left|\frac{x-a}{x+a}\right| + c$

$$y = x + \frac{1}{2(1)}\ln\left|\frac{x-1}{x+1}\right| + c$$

$$y = x + \frac{1}{2}\ln\left|\frac{x-1}{x+1}\right| + c \text{ (General solution)}$$

Q10. $y - x\frac{dy}{dx} = 2\left(y^2 + \frac{dy}{dx}\right)$

Solution:

$$y - x\frac{dy}{dx} = 2\left(y^2 + \frac{dy}{dx}\right)$$

Separating the variables:

$$y - x\frac{dy}{dx} = 2y^2 + 2\frac{dy}{dx}$$

$$-x\frac{dy}{dx} - 2\frac{dy}{dx} = 2y^2 - y$$

Multiply both sides by '–1'

$$x\frac{dy}{dx} + 2\frac{dy}{dx} = -2y^2 + y$$

$$(x+2)\frac{dy}{dx} = y(1-2y)$$

$$\frac{1}{y(1-2y)}dy = \frac{1}{x+2}dx$$

Integrating both sides:

$$\int \frac{(1-2y)+2y}{y(1-2y)}dy = \int \frac{1}{x+2}dx$$

$$\int\left[\frac{(1-2y)}{y(1-2y)} + \frac{2y}{y(1-2y)}\right]dy = \int \frac{1}{x+2}dx$$

$$\int\left[\frac{1}{y} + \frac{2}{1-2y}\right]dy = \int \frac{1}{x+2}dx$$

$$\int \frac{1}{y}dy - \int \frac{2}{2y-1}dy = \int \frac{1}{x+2}dx$$

Using: $\int \frac{f'(x)}{f(x)}dx = \ln|f(x)| + c$

$$\ln|y| - \ln|2y-1| = \ln|x+2| + \ln|c|$$

www.ilmkidunya.com

www.ilmkidunya.com

$$\ln\left|\frac{y}{2y-1}\right| = \ln|c(x+2)|$$

$$\frac{y}{2y-1} = c(x+2)$$

$$y = c(x+2)(2y-1) \quad \text{(General solution)}$$

Q11. $\sec^2 x \tan y\,dx + \sec^2 y \tan x\,dy = 0$

Solution:

$$\sec^2 x \tan y\,dx + \sec^2 y \tan x\,dy = 0$$

Separating the variables:

$$\sec^2 y \cdot \tan x\,dy = -\sec^2 x \cdot \tan y\,dx$$

$$\frac{\sec^2 y}{\tan y}dy = -\frac{\sec^2 x}{\tan x}dx$$

Integrating both sides:

$$\int\frac{\sec^2 y}{\tan y}dy = -\int\frac{\sec^2 x}{\tan x}dx$$

Using: $\int\frac{f'(x)}{f(x)}dx = \ln|f(x)|+c$

$$\ln|\tan y| = -\ln|\tan x|+\ln|c|$$

$$\ln|\tan y|+\ln|\tan x| = \ln|c|$$

$$\ln|\tan x\cdot\tan y| = \ln|c|$$

$$\tan x\cdot\tan y = c \text{ (General solution)}$$

Q12. $(e^{2x}+e^{-2x})dy+(e^{-2x}-e^{2x})dx=0$

Solution:

$$(e^{2x}+e^{-2x})dy+(e^{-2x}-e^{2x})dx=0$$

Separating the variables:

$$(e^{2x}+e^{-2x})dy = -(e^{-2x}-e^{2x})dx$$

$$1dy = \frac{e^{2x}-e^{-2x}}{e^{2x}+e^{-2x}}dx$$

Integrating both sides:

$$\int 1dy = \int\frac{e^{2x}-e^{-2x}}{e^{2x}+e^{-2x}}dx$$

$$\int 1dy = \frac{1}{2}\int\frac{2e^{2x}-2e^{-2x}}{e^{2x}+e^{-2x}}dx$$

Using: $\int\frac{f'(x)}{f(x)}dx = \ln|f(x)|+c$

$$y = \frac{1}{2}\ln(e^{2x}+e^{-2x})+c_1$$

$$2y = \ln(e^{2x}+e^{-2x})+2c_1$$

$$2y = \ln(e^{2x}+e^{-2x})+\ln|c|, \text{ where } 2c_1 = \ln|c|$$

$$2y = \ln|c(e^{2x}+e^{-2x})|$$

Q13. $x\sin x\,dx + \ln y\,dy = 0$

Solution:

$$x\sin x\,dx + \ln y\,dy = 0$$

$$\ln y\,dy = -x\sin x\,dx$$

Integrating both sides:

$$\int \ln y\,dy = -\int x\cdot\sin x\cdot dx$$

$$\int \underset{1st}{\ln y}\cdot 1\underset{2nd}{dy} = -\int \underset{1st}{x}\cdot\underset{2nd}{\sin x\,dx}$$

Integrating by parts, we have

$$\ln y\cdot\int 1dy - \int\left\{\frac{d}{dy}(\ln y)\int 1dy\right\}dy$$

$$= -\left[x\int\sin x\,dx - \int\left\{\frac{d}{dx}(x)\cdot\int\sin x\,dx\right\}dx\right]$$

$$\ln y\cdot y - \int\frac{1}{y}\cdot y\,dy = -\left[x(-\cos x)-\int 1(-\cos x)dx\right]$$

$$y\ln y - \int 1dy = x\cos x - \int\cos x\,dx$$

$$y\ln y - y = x\cos x - \sin x + c \quad \text{(General solution)}$$

Q14. $\frac{dy}{dx} = \cos^2\left(\frac{y}{x}\right)+\frac{y}{x}$

Solution:

$$\frac{dy}{dx} = \cos^2\left(\frac{y}{x}\right)+\frac{y}{x} \text{ (Homogeneous)}$$

Put $y = vx \Rightarrow \frac{dy}{dx} = v + x\frac{dv}{dx}$

$$v + x\frac{dv}{dx} = \cos^2 v + v$$

Separating the variables:

$$x\frac{dv}{dx} = \cos^2 v$$

$$\frac{1}{\cos^2 v}dv = \frac{1}{x}dx$$

$$\sec^2 v\,dv = \frac{1}{x}dx$$

Integrating both sides:

$$\int\sec^2 v\,dv = \int\frac{1}{x}dx$$

$$\tan v = \ln|x|+\ln|c|$$

$$\tan v = \ln|cx|$$

$$\tan\left(\frac{y}{x}\right) = \ln|cx| \qquad \because y = vx \Rightarrow v = \frac{y}{x}$$

(General solution)

www.ilmkidunya.com

www.ilmkidunya.com

Q15. $(y^2+2xy)dx+x^2dy=0$

Solution:

$$(y^2+2xy)dx+x^2dy=0 \text{ (Homogeneous)}$$

$$x^2dy=-(y^2+2xy)dx$$

$$\frac{dy}{dx}=-\frac{y^2+2xy}{x^2}$$

Put $y=vx \Rightarrow \frac{dy}{dx}=v+x\frac{dv}{dx}$

$$v+x\frac{dv}{dx}=-\frac{v^2x^2+2x(vx)}{x^2}$$

$$v+x\frac{dv}{dx}=-\frac{v^2x^2+2vx^2}{x^2}$$

$$v+x\frac{dv}{dx}=-\frac{x^2(v^2+2v)}{x^2}$$

$$x\frac{dv}{dx}=-v^2-2v-v$$

$$x\frac{dv}{dx}=-v^2-3v$$

Separating the variables:

$$x\,dv=-v(v+3)dx$$

$$\frac{1}{v(v+3)}dv=-\frac{1}{x}dx$$

Integrating both sides:

$$\frac{1}{3}\int\frac{3}{v(v+3)}dv=-\int\frac{1}{x}dx$$

$$\int\frac{(v+3)-v}{v(v+3)}dv=-3\int\frac{1}{x}dx$$

$$\int\left(\frac{1}{v}-\frac{1}{v+3}\right)dv=-3\int\frac{1}{x}dx$$

$$\int\frac{1}{v}dv-\int\frac{1}{v+3}dv=-3\int\frac{1}{x}dx$$

Using: $\int\frac{f'(x)}{f(x)}dx=\ln|f(x)|+c$

$$\ln|v|-\ln|v+3|=-3\ln|x|+\ln|c|$$

$$\ln\left|\frac{v}{v+3}\right|=\ln\left|\frac{c}{x^3}\right|$$

$$\frac{v}{v+3}=\frac{c}{x^3}$$

$$\frac{\frac{y}{x}}{\frac{y}{x}+3}=\frac{c}{x^3} \qquad \because y=vx \Rightarrow v=\frac{y}{x}$$

$$\frac{y}{x\left(\frac{y+3x}{x}\right)}=\frac{c}{x^3}$$

$$\frac{y}{y+3x}=\frac{c}{x^3}$$

$$\Rightarrow \quad x^3y=c(y+3x) \text{ (General solution)}$$

Q16. $(x^2+3y^2)dx-2xy\,dy=0$

Solution:

$$(x^2+3y^2)dx-2xy\,dy=0 \text{ (Homogeneous)}$$

$$(x^2+3y^2)dx=2xy\,dy$$

$$\frac{dy}{dx}=\frac{x^2+3y^2}{2xy}$$

Put $y=vx \Rightarrow \frac{dy}{dx}=v\cdot 1+x\frac{dv}{dx}$

$$v+x\frac{dv}{dx}=\frac{x^2+3(vx)^2}{2x(vx)}$$

$$v+x\frac{dv}{dx}=\frac{x^2(1+3v^2)}{2x^2v}$$

$$x\frac{dv}{dx}=\frac{1+3v^2}{2v}-v$$

$$x\frac{dv}{dx}=\frac{1+3v^2-2v^2}{2v}$$

$$x\frac{dv}{dx}=\frac{1+v^2}{2v}$$

Separating the variables:

$$x\,dv=\frac{1+v^2}{2v}dx$$

$$\frac{2v}{1+v^2}dv=\frac{1}{x}dx$$

Integrating both sides:

$$\int\frac{2v}{1+v^2}dv=\int\frac{1}{x}dx$$

Using: $\int\frac{f'(x)}{f(x)}dx=\ln|f(x)|+c$

$$\ln(1+v^2)=\ln|x|+\ln|c|$$

$$\ln(1+v^2)=\ln|cx|$$

$$1+v^2=cx$$

$$1+\frac{y^2}{x^2}=cx \qquad \because y=vx \Rightarrow v=\frac{y}{x}$$

$$\frac{x^2+y^2}{x^2}=cx$$

$$x^2+y^2=cx^3 \qquad \text{(General solution)}$$

www.ilmkidunya.com

www.ilmkidunya.com

Q17. $(x^2+xy+y^2)dx-x^2dy=0$

Solution:

$$(x^2+xy+y^2)dx-x^2dy=0 \text{ (Homogeneous)}$$

$$(x^2+xy+y^2)dx = x^2dy$$

$$\frac{dy}{dx} = \frac{x^2+xy+y^2}{x^2}$$

Put $y=vx \Rightarrow \frac{dy}{dx}=v+x\frac{dv}{dx}$

$$v+x\frac{dv}{dx} = \frac{x^2+x(vx)+(vx)^2}{x^2}$$

$$v+x\frac{dv}{dx} = \frac{x^2+x^2v+v^2x^2}{x^2}$$

$$v+x\frac{dv}{dx} = \frac{x^2(1+v+v^2)}{x^2}$$

$$x\frac{dv}{dx} = 1+v+v^2-v$$

Separating the variables:

$$x\frac{dv}{dx} = 1+v^2$$

$$\frac{1}{1+v^2}dv = \frac{1}{x}dx$$

Integrating both sides:

$$\int\frac{1}{1+v^2}dv = \int\frac{1}{x}dx$$

$$\tan^{-1}v = \ln|x|+\ln|c|$$

$$\tan^{-1}\left(\frac{y}{x}\right) = \ln|cx| \qquad \because y=vx \Rightarrow v=\frac{y}{x}$$

(General solution)

Q18. $x\frac{dy}{dx}=xe^{-\frac{y}{x}}+y$

Solution:

$$x\frac{dy}{dx} = xe^{-\frac{y}{x}}+y \qquad \text{(Homogeneous)}$$

$$x\frac{dy}{dx} = x\left(e^{-\frac{y}{x}}+\frac{y}{x}\right)$$

$$\frac{dy}{dx} = e^{-\frac{y}{x}}+\frac{y}{x}$$

Put $y=vx \Rightarrow \frac{dy}{dx}=v+x\frac{dv}{dx}$

$$v+x\frac{dv}{dx} = e^{-v}+v$$

$$x\frac{dv}{dx} = e^{-v}$$

Separating the variables:

$$\frac{1}{e^{-v}}dv = \frac{1}{x}dx$$

Integrating both sides:

$$\int e^v dv = \int\frac{1}{x}dx$$

$$e^v = \ln|x|+\ln|c|$$

$$e^{\frac{y}{x}} = \ln|cx| \qquad \because y=vx \Rightarrow v=\frac{y}{x}$$

(General solution)

Q19. $y-x\frac{dy}{dx}=3\left(1+x\frac{dy}{dx}\right)$

Solution:

$$y-x\frac{dy}{dx}=3\left(1+x\frac{dy}{dx}\right)$$

Separating the variables:

$$y-x\frac{dy}{dx} = 3+3x\frac{dy}{dx}$$

$$y-3 = 3x\frac{dy}{dx}+x\frac{dy}{dx}$$

$$4x\frac{dy}{dx} = y-3$$

$$\frac{1}{y-3}dy = \frac{1}{4x}dx$$

Integrating both sides:

$$\int\frac{1}{y-3}dy = \frac{1}{4}\int\frac{1}{x}dx$$

$$\ln|y-3| = \frac{1}{4}\ln|x|+\ln|c|$$

$$\ln|y-3| = \ln|x^{\frac{1}{4}}|+\ln|c|$$

$$\ln|y-3| = \ln|cx^{\frac{1}{4}}|$$

$$\Rightarrow \quad y-3 = cx^{\frac{1}{4}}$$

$$y = 3+cx^{\frac{1}{4}} \text{ (General solution)}$$

Q20. $y\,dx+x\,dy=0$

Solution:

$$y\,dx+x\,dy=0$$

Separating the variables:

$$x\,dy = -y\,dx$$

$$\frac{1}{y}dy = -\frac{1}{x}dx$$

www.ilmkidunya.com

www.ilmkidunya.com

Integrating both sides:

$$\int \frac{1}{y}dy = -\int \frac{1}{x}dx$$

$$\ln|y| = -\ln|x| + \ln|c|$$

$$\ln|y| = \ln\left|\frac{c}{x}\right|$$

$$\Rightarrow \quad y = \frac{c}{x}$$

$$xy = c \qquad \text{(General solution)}$$

Q21. $\frac{dy}{dx} + \frac{2xy}{2y+1} = x$

Solution:

$$\frac{dy}{dx} + \frac{2xy}{2y+1} = x$$

Separating the variables:

$$\frac{dy}{dx} = x - \frac{2xy}{2y+1}$$

$$\frac{dy}{dx} = \frac{2xy + x - 2xy}{2y+1}$$

$$\frac{dy}{dx} = \frac{x}{2y+1}$$

$$(2y+1)dy = x\,dx$$

Integrating both sides:

$$\int (2y+1)dy = \int x\,dx$$

$$2\frac{y^2}{2} + y = \frac{x^2}{2} + c$$

$$y^2 + y = \frac{x^2}{2} + c$$

$$y(y+1) = \frac{x^2}{2} + c \quad \text{(General solution)}$$

Solve the initial value problems (22 to 25):

Q22. $\frac{dy}{dx} - x = xy^2;\ y(0) = 1$

Solution:

$$\frac{dy}{dx} - x = xy^2;\ y(0) = 1$$

Separating the variables:

$$\frac{dy}{dx} = x + xy^2$$

$$dy = x(1+y^2)dx$$

$$\frac{1}{1+y^2}dy = x\,dx$$

Integrating both sides:

$$\int \frac{1}{1+y^2}dy = \int x\,dx$$

$$\tan^{-1} y = \frac{x^2}{2} + c \qquad \ldots(1)$$

Using: $y(0) = 1 \Rightarrow x = 0, y = 1$

$$\tan^{-1}(1) = \frac{0^2}{2} + c$$

$$\frac{\pi}{4} = c \qquad \text{Put in eq. (1), we get}$$

$$\boxed{\tan^{-1} y = \frac{x^2}{2} + \frac{\pi}{4}}$$

Q23. $\frac{ds}{dt} + 2st = 0;\ s = 4e$ **when** $t = 0$

Solution:

$$\frac{ds}{dt} + 2st = 0;\ s = 4e \text{ when } t = 0$$

Separating the variables:

$$\frac{ds}{dt} = -2st$$

$$\frac{1}{s}ds = -2t\,dt$$

Integrating both sides:

$$\int \frac{1}{s}ds = -2\int t\,dt$$

$$\ln|s| = -2\frac{t^2}{2} + c_1$$

$$\ln|s| = -t^2 + c_1$$

$$s = e^{-t^2 + c_1} \qquad \text{Exponential Form}$$

$$s = e^{-t^2} \cdot e^{c_1}$$

$$s = ce^{-t^2} \qquad \ldots(1) \text{ where } c = e^{c_1}$$

Using: $s = 4e$, when $t = 0$

$$4e = ce^{-0^2} \Rightarrow c = 4e \text{ Put in eq. (1), we get}$$

$$s = 4e \cdot e^{-t^2}$$

$$\boxed{s = 4e^{1-t^2}}$$

www.ilmkidunya.com

www.ilmkidunya.com

Q24. $(y+\sqrt{x^2+y^2})dx - x\,dy = 0;\ y=0$ when $x=1$

Solution:

$$(y+\sqrt{x^2+y^2})dx - x\,dy = 0;\ y=0 \text{ when } x=1$$

$$x\,dy = (y+\sqrt{x^2+y^2})dx$$

$$\frac{dy}{dx} = \frac{y+\sqrt{x^2+y^2}}{x}$$

Put $y=vx \Rightarrow \frac{dy}{dx} = v + x\frac{dv}{dx}$

$$v + x\frac{dv}{dx} = \frac{vx+\sqrt{x^2+v^2x^2}}{x}$$

$$v + x\frac{dv}{dx} = \frac{vx+\sqrt{x^2(1+v^2)}}{x}$$

$$v + x\frac{dv}{dx} = \frac{vx+x\sqrt{1+v^2}}{x}$$

$$v + x\frac{dv}{dx} = v+\sqrt{1+v^2}$$

$$x\frac{dv}{dx} = \sqrt{1+v^2}$$

Separating the variables:

$$\frac{1}{\sqrt{1+v^2}}dv = \frac{1}{x}dx$$

Integrating both sides:

$$\int\frac{1}{\sqrt{1+v^2}}dv = \int\frac{1}{x}dx$$

Using: $\int\frac{1}{\sqrt{a^2+x^2}}dx = \ln(x+\sqrt{a^2+x^2})+c$

$$\ln(v+\sqrt{1+v^2}) = \ln|x|+\ln|c|$$

$$\ln\left(\frac{y}{x}+\sqrt{1+\frac{y^2}{x^2}}\right) = \ln|x|+\ln|c| \quad \because y=vx \Rightarrow v=\frac{y}{x}$$

$$\ln\left(\frac{y}{x}+\frac{\sqrt{x^2+y^2}}{x}\right) = \ln|x|+\ln|c|$$

$$\ln\left(\frac{y+\sqrt{x^2+y^2}}{x}\right) = \ln|x|+\ln|c|$$

$$\ln(y+\sqrt{x^2+y^2}) - \ln|x| = \ln|x|+\ln|c|$$

$$\ln(y+\sqrt{x^2+y^2}) = 2\ln|x|+\ln|c|$$

$$\ln(y+\sqrt{x^2+y^2}) = \ln|x^2|+\ln|c|$$

$$\ln(y+\sqrt{x^2+y^2}) = \ln|cx^2|$$

$$\Rightarrow \quad y+\sqrt{x^2+y^2} = cx^2 \qquad \ldots(1)$$

Using: $y(1)=0 \Rightarrow x=1, y=0$

$$0+\sqrt{1^2+0^2} = c(1)^2 \Rightarrow c=1$$

Put $c=1$ in eq. (1), we get

$$\boxed{y+\sqrt{x^2+y^2} = x^2}$$

Q25. $\frac{dy}{dx} = \frac{x+y}{x};\ y(1)=1$

Solution:

$$\frac{dy}{dx} = \frac{x+y}{x};\ y(1)=1$$

Put $y=vx \Rightarrow \frac{dy}{dx} = v + x\frac{dv}{dx}$

$$v + x\frac{dv}{dx} = \frac{x+vx}{x} = \frac{x(1+v)}{x}$$

$$v + x\frac{dv}{dx} = 1+v$$

$$x\frac{dv}{dx} = 1$$

Separating the variables:

$$dv = \frac{1}{x}dx$$

Integrating both sides:

$$\int 1dv = \int\frac{1}{x}dx$$

$$v = \ln|x|+c$$

$$\frac{y}{x} = \ln|x|+c \quad \because y=vx \Rightarrow v=\frac{y}{x}$$

$$y = x\ln|x|+cx \qquad \ldots(1)$$

Using: $y(1)=1 \Rightarrow x=1, y=1$

$$1 = 1\ln(1)+c(1)$$

$1 = 0+c \Rightarrow c=1$ Put in eq. (1), we get

$$y = x\ln|x|+(1)x$$

$$\boxed{y = x+x\ln|x|}$$

www.ilmkidunya.com

www.ilmkidunya.com

Content Outline

- Applications of First Order Differential Equations in Real-Life Problems

APPLICATIONS OF FIRST ORDER DIFFERENTIAL EQUATIONS IN REAL-LIFE PROBLEMS

First-order differential equations play a vital role in modeling various real-life phenomena in fields such as physics, biology, chemistry, economics, and engineering. These equations involve the rate of change of a quantity and help describe how that quantity evolves over time.

Example 8: (Population Growth)

In a culture, there are 100 bacteria initially and are doubled in 2 hours. Find the number of bacteria 7 hours later.

Solution:

Let N be the number of bacteria present at time t, then

$$\frac{dN}{dt} \propto N$$

$$\frac{dN}{dt} = kN, \text{ where } k \text{ is the constant of proportionality and } k > 0$$

$$\frac{1}{N}dN = k\,dt$$

Integrating both sides:

$$\int \frac{1}{N}dN = k\int 1dt$$

$$\ln|N| = kt + c_1$$

$$N = e^{kt+c_1} \quad \text{(Exponential form)}$$

$$= e^{kt}\cdot e^{c_1}$$

$$N = ce^{kt} \quad \ldots(1), \text{ where } c = e^{c_1}$$

1st Condition: $N(0) = 100 \Rightarrow t = 0, N = 100$

$$100 = ce^{k(0)} \Rightarrow c = 100 \text{ Put in eq. (1)}$$

$$N = 100e^{kt} \quad \ldots(2)$$

2nd Condition: $N(2) = 200 \Rightarrow t = 2, N = 200$

$$200 = 100e^{2k}$$

$$2 = e^{2k}$$

Taking $\ln$ on both sides:

$$\ln 2 = \ln(e^{2k})$$

$$\ln 2 = 2k\cdot \ln e \Rightarrow 2k = \ln 2 \because \ln e = 1$$

$$k = \frac{1}{2}\ln 2 \Rightarrow k = \ln\sqrt{2} \text{ Put in eq. (2)}$$

$$\boxed{N = 100e^{(\ln\sqrt{2})t}}$$

Now, $N(7) = ?$

$$N(7) = 100e^{7\ln\sqrt{2}}$$

$$= 100e^{\ln(\sqrt{2})^7} = 100(\sqrt{2})^7$$

$$= 100(2^{\frac{7}{2}}) \approx 1131.371$$

Hence, the number of bacteria 7 hours later is 1131 (approximately).

Example 9: (Radioactive Decay)

A certain radioactive substance has a mass of 80 grams initially. After 10 hours, only 50 grams remain.

(a) Find decay constant. **(b) How much of the substance will remain after 24 hours?**

(c) After how many hours will only 20 grams remain?

Solution:

Let M be the mass of radioactive decay at time t.

$$-\frac{dM}{dt} \propto M$$

$$-\frac{dM}{dt} = kM, \text{ where } k \text{ is the constant of proportionality and } k > 0$$

$$\frac{1}{M}dM = -k\,dt$$

Integrating both sides:

$$\int \frac{1}{M}dM = -k\int 1dt$$

$$\ln|M| = -kt + c_1$$

$$M = e^{-kt+c_1} \quad \text{(Exponential Form)}$$

$$= e^{-kt}\cdot e^{c_1}$$

$$M = ce^{-kt} \quad \ldots(1) \text{ where } c = e^{c_1}$$

(a) Decay constant: $k = ?$

1st condition: $M(0) = 8 \Rightarrow t = 0, M = 80$

$$80 = ce^0 \Rightarrow c = 80 \text{ Put in eq. (1)}$$

$$M = 80e^{-kt} \quad \ldots(2)$$

2nd condition: $M(10) = 50 \Rightarrow t = 10, M = 50$

$$50 = 80e^{-10k}$$

$$\frac{50}{80} = e^{-10k}$$

www.ilmkidunya.com

www.ilmkidunya.com

Taking $\ln$ on both sides:

$$\ln\left(\frac{5}{8}\right) = \ln(e^{-10k})$$

$$\ln\left(\frac{5}{8}\right) = -10k \cdot \ln e \Rightarrow \ln\left(\frac{5}{8}\right) = -10k \quad \because \ln e = 1$$

$$k = -\frac{1}{10}\ln\left(\frac{5}{8}\right) \approx 0.047$$

(b) Mass after 24 hours: $M(24) = ?$

Put $k = 0.047$, $t = 24$ in eq. (2)

$$M(24) = 80e^{-0.047(24)}$$
$$= 80e^{-1.128}$$
$$M(24) \approx 25.9 \approx 26 \text{ grams}$$

(c) $M = 20, t = ?, k = 0.047$

Eq. (2) $\Rightarrow$ $20 = 80e^{-0.047t}$

$$\frac{20}{80} = e^{-0.047t}$$

Taking $\ln$ on both sides:

$$\ln\left(\frac{1}{4}\right) = \ln e^{-0.047t}$$

$$\ln(1) - \ln 4 = -0.047t \cdot \ln e$$

$$0 - \ln 4 = -0.047t \quad \because \ln 1 = 0, \ln e = 1$$

$$t = \frac{\ln 4}{0.047}$$

$$t \approx 29.5 \text{ hours}$$

Example 10 (Deflation Problem in Economics)

Suppose an economy is experiencing deflation at 4% per year. If the current price of an item is Rs. 500, find its expected price after 3 years.

Solution:

Let P be the price of item at time t

$$-\frac{dp}{dt} \propto P$$

$$-\frac{dp}{dt} = 4\% P$$

$$\frac{dp}{dt} = -0.04P$$

$$\frac{1}{P}dp = -0.04dt$$

Integrating both sides:

$$\int\frac{1}{P}dp = -0.04\int 1dt$$

$$\ln|P| = -0.04t + c_1$$

$$P = e^{-0.04t+c_1} \quad \text{(Exponential Form)}$$

$$P = e^{-0.04t} \cdot e^{c_1}$$

$$P = ce^{-0.04t} \quad \ldots(1) \text{ where } c = e^{c_1}$$

Given condition: $P(0) = 500 \Rightarrow t = 0, p = 500$

$500 = ce^0 \Rightarrow c = 500$ Put in eq. (1)

$$\boxed{P = 500e^{-0.04t}}$$

Now, $P(3) = ?$

$$P(3) = 500e^{-0.04(3)}$$
$$= 500e^{-0.12} \approx 500(0.88692)$$
$$P(3) \approx 443.46$$

Hence the expected price of the item after 3 years will be Rs. 443.5.

Example 11 (Cooling/Heating Problem)

A cup of coffee is served at 90°C in a room where the temperature is 25°C. After 10 minutes, the coffee cools to 60°C. Find the temperature of the coffee after 20 minutes.

Solution:

Let T be the temperature of coffee at time t.

By Newton's Law of Cooling:

$$\frac{dT}{dt} \propto (T - T_s)$$

$$\frac{dT}{dt} = -k(T - 25), \text{ where } k \text{ is the constant of proportionate and } k > 0$$

$$\frac{1}{T-25}dT = -k\,dt$$

Integrating both sides:

$$\int\frac{1}{T-25}dt = -k\int 1dt$$

$$\ln|T-25| = -kt + c_1$$

$$T - 25 = e^{-kt+c_1} \quad \text{(Exponential Form)}$$

$$T - 25 = e^{-kt} \cdot e^{c_1}$$

$$T - 25 = ce^{-kt} \text{ where } c = e^{c_1}$$

$$T = 25 + ce^{-kt} \quad \ldots(1)$$

1st condition: $T(0) = 90 \Rightarrow t = 0, T = 90$

$90 = 25 + ce^0 \Rightarrow c = 90 - 25$

$c = 65$ Put in eq. (1)

$$T = 25 + 65e^{-kt} \quad \ldots(2)$$

2nd condition: $T(10) = 60 \Rightarrow t = 10, T = 60$

$$60 = 25 + 65e^{-10k}$$

$$60 - 25 = 65e^{-10k}$$

$$\frac{35}{65} = e^{-10k}$$

www.ilmkidunya.com

www.ilmkidunya.com

Taking $\ln$ on both sides:

$$\ln\left(\frac{7}{13}\right) = \ln e^{-10k}$$

$$\ln\left(\frac{7}{13}\right) = -10k \cdot \ln e$$

$$k = -\frac{1}{10}\ln\left(\frac{7}{13}\right) \qquad \because \ln e = 1$$

$$k \approx 0.0619 \qquad \text{Put in eq. (2)}$$

$$\boxed{T = 25 + 65e^{-0.0619t}}$$

Now, $T(20) = ?$

$$T(20) = 25 + 65e^{-0.0619(20)}$$

$$= 25 + 65e^{-1.238}$$

$$\approx 25 + 65(0.2899)$$

$$T(20) \approx 43.85°C$$

Hence the approximate temperature of the coffee after 20 minutes will be 43.85°C.

Example 12 (RL Circuit Problem)

An RL circuit has an emf of 5 volts, a resistance 50 ohms, an inductor of 1 henry and no initial current. Find the current in the circuit at any time t.

Solution:

Let I be the current flowing in the circuit at time t.

Given that: $V_S = 5$ volts, $R = 50$ ohms, $L = 1$ henry, $I(0) = 0$

As we know

$$L\frac{dI}{dt} = V_s - RI$$

Putting values, we get

$$(1)\frac{dI}{dt} = 5 - 50I$$

$$\frac{dI}{dt} = 5(1 - 10I)$$

$$\frac{1}{1-10I}dI = 5dt$$

$$\frac{-10}{1-10I}dI = -50dt \qquad \text{Multiply by } -10$$

Integrating both sides:

$$\int\frac{-10}{1-10I}dI = -50\int 1dt$$

$$\ln|1-10I| = -50t + c \qquad \ldots(1)$$

1st condition: $I(0) = 0 \Rightarrow t = 0, I = 0$

$$\ln|1-10(0)| = -50(0) + c$$

$$\ln(1) = c \Rightarrow c = 0 \quad \text{Put in eq. (1)}$$

$$\ln|1-10I| = -50t$$

$$|1-10I| = e^{-50t} \qquad \text{(Exponential Form)}$$

$$\pm(1-10I) = e^{-50t} \qquad \ldots(2)$$

Checking:

$$I(0) = 0$$

$$\pm(1-10(0)) = e^0$$

$$\pm 1 = 1 \Rightarrow \text{Ignore the -ve sign}$$

From eq. (2), we have

$$+(1-10I) = e^{-50t}$$

$$1-10I = e^{-50t}$$

$$1-e^{-50t} = 10I$$

$$\Rightarrow \boxed{I(t) = \frac{1}{10}(1-e^{-50t})}$$

EXERCISE 4.3

Q1. A particle is moving in a straight line and its acceleration is given by $a = 2t - 7$. Find:

(i) velocity v in terms of t if $v = 10$ m/sec, when $t = 0$.

Solution:

Given $a = 2t - 7$

$$\frac{dv}{dt} = 2t - 7 \qquad \because a = \frac{dv}{dt}$$

$$dv = (2t-7)dt$$

Integrating both sides:

$$\int 1dv = \int(2t-7)dt$$

$$v = 2\frac{t^2}{2} - 7t + c_1$$

$$v = t^2 - 7t + c_1 \qquad \ldots(1)$$

Using initial condition: $v = 10, t = 0$

$$10 = 0^2 - 7(0) + c_1 \Rightarrow c_1 = 10 \quad \text{Put in eq. (1)}$$

$$\boxed{v = t^2 - 7t + 10}$$

(ii) distance s in terms of t if $s = 0$ m, when $t = 0$.

Solution:

As $v = t^2 - 7t + 10$

$$\Rightarrow \frac{ds}{dt} = t^2 - 7t + 10 \qquad \because v = \frac{ds}{dt}$$

www.ilmkidunya.com

www.ilmkidunya.com

$$ds = (t^2 - 7t + 10)dt$$

Integrating both sides:

$$\int 1ds = \int (t^2 - 7t + 10)dt$$

$$s = \frac{t^3}{3} - 7\frac{t^2}{2} + 10t + c_2 \quad \ldots(2)$$

Using initial condition: $s = 0, t = 0$

$$0 = \frac{(0)^3}{3} - \frac{7}{2}(0) + 10(0) + c_2$$

$\Rightarrow$ $c_2 = 0$ Put in eq. (2)

$$\boxed{s = \frac{1}{3}t^3 - \frac{7}{2}t^2 + 10t}$$

Q2. In a culture, there were 1000 bacteria initially and were found to be 900 after five hours. Use differential equation to find the number of bacteria after 7 hours.

Solution:

Let N be the number of bacteria present at time t

$$\frac{dN}{dt} \propto N$$

$$\frac{dN}{dt} = kN, \quad \text{where } k \text{ is the constant of proportionality and } k > 0$$

$$\frac{1}{N}dN = k\,dt$$

Integrating both sides:

$$\int \frac{1}{N}dN = k\int 1dt$$

$$\ln|N| = kt + c_1$$

$$N = e^{kt+c_1} \quad \text{(Exponential form)}$$

$$= e^{kt} \cdot e^{c_1}$$

$$N = ce^{kt} \quad \ldots(1), \text{ where } c = e^{c_1}$$

1st condition:

$$N(0) = 1000 \quad \Rightarrow t = 0, N = 1000$$

$$1000 = ce^0 \quad \Rightarrow c = 1000 \text{ Put in eq. (1)}$$

$$N = 1000e^{kt} \quad \ldots(2)$$

2nd condition:

$$N(5) = 900 \quad \Rightarrow t = 5, N = 900$$

$$900 = 1000e^{5k}$$

$$\frac{900}{1000} = e^{5k}$$

Taking $\ln$ on both sides:

$$\ln\left(\frac{9}{10}\right) = \ln(e^{5k})$$

$$\ln\left(\frac{9}{10}\right) = 5k \ln e$$

$$k = \frac{1}{5}\ln\left(\frac{9}{10}\right) \quad \because \ln e = 1$$

$$k \approx -0.0211 \text{ Put in eq. (2)}$$

$$N = 1000e^{(-0.0211)t}$$

Now, $N(7) = ?$

$$N(7) = 1000e^{(-0.0211)(7)}$$

$$\approx 1000(0.8627)$$

$$N(7) \approx 863$$

Hence, the number of bacteria 7 hours later is 863 (approximately).

Q3. The number of bacteria in a culture currently is 1000. Three hours ago, it was 750. What was the number of bacteria five hours ago?

Solution:

Let N be the number of bacteria present at time t

$$\frac{dN}{dt} \propto N$$

$$\frac{dN}{dt} = kN, \quad \text{where } k \text{ is the constant of proportionality and } k > 0$$

$$\Rightarrow \frac{1}{N}dN = k\,dt$$

Integrating both sides:

$$\int \frac{1}{N}dN = k\int 1dt$$

$$\ln|N| = kt + c_1$$

$$N = e^{kt+c_1} \quad \text{(Exponential Form)}$$

$$N = e^{c_1} \cdot e^{kt}$$

$$N = ce^{kt} \quad \ldots(1) \text{ where } c = e^{c_1}$$

1st condition:

$$N(0) = 1000 \quad \Rightarrow t = 0, N = 1000$$

$$1000 = ce^0 \quad \Rightarrow c = 1000 \text{ Put in eq. (1)}$$

$$N = 1000e^{kt} \quad \ldots(2)$$

2nd condition:

$$N(-3) = 750 \quad \Rightarrow t = -3, N = 750$$

$$750 = 1000e^{-3k} \Rightarrow e^{-3k} = \frac{750}{1000}$$

Taking $\ln$ on both sides:

$$\ln(e^{-3k}) = \ln\left(\frac{3}{4}\right) \Rightarrow -3k \cdot \ln e = \ln\left(\frac{3}{4}\right)$$

www.ilmkidunya.com

www.ilmkidunya.com

$$k = -\frac{1}{3}\ln\left(\frac{3}{4}\right)$$

$k \approx 0.0959$ Put in eq. (2)

$\boxed{N = 1000e^{0.0959t}}$

Now, $N(-5) = ?$

$$N(-5) = 1000e^{(0.0959)(-5)}$$
$$\approx 1000(0.6191)$$
$$N(-5) \approx 619$$

Hence, the number of bacteria 5 hours ago is 619 (approximately).

Q4. A radioactive isotope has a half-life of 12 hours. The initial mass is 160 grams.

Solution:

Let M be the mass of radioactive decay at time t

$$-\frac{dM}{dt} \propto M$$

$$\frac{dM}{dt} = -kM, \quad \text{where } k \text{ is the constant of proportionality and } k > 0$$

$$\frac{1}{M}dM = -k\,dt$$

Integrating both sides:

$$\int\frac{1}{M}dM = -k\int 1dt$$

$$\ln|M| = -kt + c_1$$

$$M = e^{-kt+c_1} \quad \text{(Exponential Form)}$$

$$M = ce^{-kt} \quad \ldots(1) \text{ where } c = e^{c_1}$$

1st condition:

$M(0) = 160 \Rightarrow t = 0, M = 160$

$160 = ce^0 \Rightarrow c = 160$ Put in eq. (1)

$M = 160e^{-kt} \quad \ldots(2)$

(a) What is the decay constant?

Solution:

2nd condition:

$M(12) = 80 \Rightarrow t = 12, M = 80$

Eq. (2) $\Rightarrow$ $80 = 160e^{-12k}$

$$\frac{80}{160} = e^{-12k}$$

Taking $\ln$ on both sides:

$$\ln\left(\frac{1}{2}\right) = \ln(e^{-12k})$$

$$\ln(2^{-1}) = -12k \cdot \ln e$$

$-\ln 2 = -12k \quad \because \ln e = 1$

$$k = \frac{\ln 2}{12}$$

$\boxed{k \approx 0.05776}$

(b) How much mass will remain after 36 hours?

Solution:

Eq. (2) $\Rightarrow M(36) = 160e^{-k(36)}$

$= 160e^{-36(0.05776)} \quad \because k \approx 0.05776$

$= 160e^{-2.07936}$

$\boxed{M(36) \approx 20 \text{ grams}}$

(c) After how many hours will only 10 grams remain?

Solution:

$M = 10, t = ?$

Eq. (2) $\Rightarrow$ $10 = 160e^{-kt}$

$$\frac{10}{160} = e^{-kt}$$

Taking $\ln$ on both sides:

$$\ln\left(\frac{1}{16}\right) = \ln(e^{-kt})$$

$$\ln(16^{-1}) = -kt \cdot \ln e$$

$-\ln 16 = -kt \quad \because \ln e = 1$

$$t = \frac{\ln 16}{k}$$

$$t = \frac{\ln 16}{0.05776} \quad \because k \approx 0.05776$$

$\boxed{t = 48 \text{ hours}}$

Half-Life

Half-life is the time required for a quantity of a radioactive substance to reduce to half of its initial amount due to radioactive decay.

Q5. Suppose the inflation rate for the cost of a basket of goods is 8% per year. If the current price level is Rs. 1000, use differential equation to find the price level after 5 years.

Solution:

Let P be the current price of a basket at time t

$$\frac{dp}{dt} \propto P$$

$$\frac{dp}{dt} = 8\%\,P$$

$$\frac{dp}{dt} = 0.08\,P$$

$$\frac{1}{P}dp = 0.08dt$$

www.ilmkidunya.com

www.ilmkidunya.com

Integrating both sides:

$$\int \frac{1}{P}dp = 0.08\int 1dt$$

$$\ln|P| = 0.08t + c_1$$

$$P = e^{0.08t+c_1} \quad \text{(Exponential Form)}$$

$$= e^{c_1} \cdot e^{0.08t}$$

$$P = ce^{0.08t} \quad \ldots(1) \text{ where } c = e^{c_1}$$

Given condition:

$P(0) = 1000 \quad \Rightarrow t = 0, P = 1000$

$1000 = ce^0 \quad \Rightarrow c = 1000$ Put in eq. (1)

$$\boxed{P = 1000e^{0.08t}}$$

Now, $P(5) = ?$

$$P(5) = 100e^{0.08(5)}$$

$$= 1000e^{0.4}$$

$$P(5) \approx 1491.82$$

Hence, the price level after 5 years is Rs. 1491.82.

Q6. Use differential equation to find the current price of a good if the deflation rate is 11% per year and its price after ten years is expected to be Rs. 5000.

Solution:

Let P be the current price of a good at time t

$$\frac{dp}{dt} \propto P$$

$$\frac{dp}{dt} = -11\% P$$

$$\frac{dp}{dt} = -0.11\% P$$

$$\frac{1}{P}dp = -0.11\% dt$$

Integrating both sides:

$$\int \frac{1}{P}dp = -0.11\int 1dt$$

$$\ln|P| = -0.11t + c_1$$

$$P = e^{-0.11t+c_1} \quad \text{(Exponential Form)}$$

$$P = e^{c_1} \cdot e^{-0.11t}$$

$$P = ce^{-0.11t} \quad \ldots(1) \text{ where } c = e^{c_1}$$

Given condition:

$P(10) = 5000 \quad \Rightarrow t = 10, P = 5000$

$$5000 = ce^{(-0.11)(10)}$$

$$5000 = ce^{-1.1} \quad \Rightarrow c = \frac{5000}{e^{-1.1}}$$

$c = 5000e^{1.1}$ Put in eq. (1)

$$\boxed{P = 5000e^{1.1} \cdot e^{-0.11t}}$$

Now, $P(0) = ?$

$$P(0) = 5000e^{1.1-0} = 5000e^{1.1}$$

$$= 5000(3.0042)$$

$$P(0) \approx 15021$$

Current price of a good is Rs. 15021 (approximately)

Q7. Aslam deposited Rs. 5000 on opening an account in a bank 15 years ago. Using differential equation, find the constant annual rate of growth if he closes his account now by receiving Rs. 15,000.

Solution:

Let A be the amount of money in the bank account at time t.

$$\frac{dA}{dt} \propto A$$

$$\frac{dA}{dt} = rA, \quad \text{where } r \text{ is a constant annual rate of growth and } r > 0$$

$$\frac{1}{A}dA = r\,dt$$

Integrating both sides:

$$\int \frac{1}{A}dA = r\int 1dt$$

$$\ln|A| = rt + c_1$$

$$A = e^{rt+c_1} \quad \text{(Exponential Function)}$$

$$= e^{c_1}e^{rt}$$

$$A = ce^{rt} \quad \ldots(1) \text{ where } c = e^{c_1}$$

1st condition:

$A(0) = 5000 \quad \Rightarrow t = 0, A = 5000$

$5000 = ce^0 \quad \Rightarrow c = 5000$ Put in eq. (1)

$$A = 5000e^{rt}$$

2nd condition:

$A(15) = 15000 \quad \Rightarrow t = 15, A = 15000$

$15000 = 5000e^{r(15)}, r = ?$

$$\frac{15000}{5000} = e^{15r}$$

$$3 = e^{15r}$$

Taking $\ln$ on both sides:

$$\ln 3 = \ln(e^{15r})$$

$$\ln 3 = 15r \cdot \ln e$$

$$r = \frac{\ln 3}{15} \quad \because \ln e = 1$$

$$r \approx 0.0732$$

$$= 0.0732 \times 100\%$$

$$= 7.32\%$$

Hence, the constant annual rate of growth is 7.32%.

www.ilmkidunya.com

www.ilmkidunya.com

Q8. A can of soda at 4°C is placed in a room at 24°C. After 30 minutes, its temperature is 12°C. Find the temperature after 1 hour.

Solution:

Let T be the temperature of soda at time t.

By Newton's Law of heating

$$\frac{dT}{dt} \propto (T_s - T)$$

$$\frac{dT}{dt} = k(T_s - T) \quad \text{where } k \text{ is a constant of proportionality and } k > 0$$

$$\frac{dT}{dt} = k(24 - T) \quad \because T_s = 24°C$$

$$\frac{1}{24-T}dT = k\,dt$$

$$\frac{-1}{24-T}dT = -k\,dt \quad \text{Multiply by } -1$$

Integrating both sides:

$$\int \frac{-1}{24-T}dT = -k\int 1dt$$

$$\ln|24-T| = -kt + c_1$$

$$24 - T = e^{-kt+c_1} \quad \text{(Exponential Form)}$$

$$24 - T = e^{c_1}\cdot e^{-kt}$$

$$T = 24 - ce^{-kt} \quad \ldots(1) \text{ where } c = e^{c_1}$$

1st condition:

$$T(0) = 4 \Rightarrow t = 0, T = 4$$

$$4 = 24 - ce^0 \Rightarrow c = 24 - 4$$

$$c = 20 \quad \text{Put in eq. (1)}$$

$$T = 24 - 20e^{-kt} \quad \ldots(2)$$

2nd condition:

$$T(30) = 12 \quad \Rightarrow t = 30, T = 12$$

$$12 = 24 - 20e^{-30k}$$

$$20e^{-30k} = 24 - 12$$

$$e^{-30k} = \frac{12}{20}$$

Taking $\ln$ on both sides:

$$\ln e^{-30k} = \ln\left(\frac{3}{5}\right)$$

$$-30k \cdot \ln e = \ln\left(\frac{3}{5}\right)$$

$$k = -\frac{1}{30}\ln\left(\frac{3}{5}\right) \quad \because \ln e = 1$$

$$k \approx 0.01703 \quad \text{Put in eq. (2)}$$

$$T = 24 - 20e^{-0.01703t}$$

Now, $T(60) = ?$

$$T(60) = 24 - 20e^{(-0.01703)(60)}$$

$$= 24 - 20e^{-1.0218}$$

$$\approx 24 - 7.20$$

$$T(60) = 16.80$$

Hence, the temperature of soda after 1 hour is 16.80°C (approximately)

Q9. An RL circuit has a battery of 12 volts, a resistor of 60 Ohms, and an inductor of 2 Henries. If the circuit is closed at time $t = 0$ with initial current zero, find the current $I(t)$ flowing in the circuit at any time t.

Solution:

Given that: $V_s = 12$ volts, $R = 60$ ohms, $L = 2$ Henries, $I(0) = 0$

As we know

$$L\frac{dI}{dt} = V_s - RI$$

Putting values, we get

$$2\frac{dI}{dt} = 12 - 60I$$

$$\frac{dI}{dt} = \frac{12}{2}(1 - 5I)$$

$$\frac{1}{1-5I}dI = 6dt$$

$$\frac{-5}{1-5I}dI = -30dt \quad \text{Multiply by } -5$$

Integrating both sides:

$$\int \frac{-5}{1-5I}dI = -30\int 1dt$$

$$\ln|1-5I| = -30t + c_1$$

$$1 - 5I = e^{-30t+c_1} \quad \text{(Exponential Form)}$$

$$1 - 5I = e^{c_1}\cdot e^{-30t}$$

$$1 - 5I = ce^{-30t} \quad \text{where } c = e^{c_1}$$

$$5I = 1 - ce^{-30t}$$

$$I = \frac{1}{5}(1 - ce^{-30t}) \quad \ldots(1)$$

Given condition:

$$I(0) = 0 \quad \Rightarrow t = 0, I = 0$$

$$0 = \frac{1}{5}(1 - ce^0) \quad \Rightarrow 1 - c = 0$$

$$c = 1 \quad \text{Put in eq. (1)}$$

$$\boxed{I = \frac{1}{5}(1 - e^{-30t})}$$

www.ilmkidunya.com

www.ilmkidunya.com

Q10. An RC circuit has an emf of 12 volts, resistance $R = 6\Omega$ and capacitance $C = 3$ farad. Initially, the capacitor is uncharged. Find the current $I(t)$ at any time t.

Solution:

Given that: $V_S = 12$ volts, $R = 6\Omega$, $c = 3$ farad, $q(0) = 0$

As we know

$$RC\frac{dq}{dt} = CV_S - q$$

Putting values, we get

$$6(3)\frac{dq}{dt} = 3(12) - q$$

$$\frac{1}{36-q}dq = \frac{1}{18}dt$$

Integrating both sides:

$$\int\frac{-1}{36-q}dq = -\frac{1}{18}\int 1dt \qquad \text{Multiply by } -1$$

$$\ln|36-q| = -\frac{1}{18}t + c_1$$

$$36 - q = e^{-\frac{1}{18}t+c_1} \qquad \text{(Exponential Form)}$$

$$36 - q = e^{c_1}\cdot e^{-\frac{1}{18}t}$$

$$36 - q = ce^{-\frac{1}{18}t} \qquad \text{where } c = e^{c_1}$$

$$q = 36 - ce^{-\frac{1}{18}t} \qquad \ldots(1)$$

Given condition:

$$q(0) = 0 \qquad \Rightarrow t = 0, q = 0$$

$$0 = 36 - ce^0 \Rightarrow c = 36 \quad \text{Put in eq. (1)}$$

$$q = 36 - 36e^{-\frac{1}{18}t}$$

Differentiate w.r.t 't', we have

$$\frac{dq}{dt} = 0 - 36e^{-\frac{1}{18}t}\cdot\left(-\frac{1}{18}\right)$$

$$I(t) = 2e^{-\frac{1}{18}t} \qquad \because I = \frac{dq}{dt}$$

Hence, the current $I(t)$ at any time t is $2e^{-\frac{1}{18}t}$ amps.

www.ilmkidunya.com

www.ilmkidunya.com

Multiple Choice Questions (MCQs)

1. **A _____ is an equation that involves at least one derivative of a dependent variable with respect to an independent variable.**
   A) algebraic equation B) differential equation
   C) trigonometric equation D) logarithmic equation

2. **The order of a differential equation is the order of the _____ derivative appearing in the differential equation.**
   A) lowest B) first C) highest D) constant

3. **The degree of a differential equation is defined when the equation is:**
   A) a polynomial in derivatives B) linear only
   C) separable only D) homogeneous only

4. **In the population model $\frac{dP}{dt} = kP$, if $k = 0$, the population:**
   A) increases B) decreases C) remains constant D) doubles

5. **If the body's temperature T is less than the surrounding temperature T_s, then the body is:**
   A) cooling down B) warming up C) unchanged D) evaporating

6. **The voltage across the resistor in the RC circuit is:**
   A) $V_R = IR$ B) $V_R = \frac{q}{C}$ C) $V_R = RC$ D) $V_R = \frac{C}{q}$

7. **The order of the differential equation $\frac{d^3y}{dx^3} + 7\frac{d^2y}{dx^2} - 9xy\frac{dy}{dx} + x^2y = 0$ is:**
   A) 1 B) 2 C) 3 D) 4

8. **The degree of the differential equation $\left(\frac{d^2y}{dx^2}\right)^3 + \frac{dy}{dx} = 1$ is:**
   A) 1 B) 2 C) 3 D) undefined

9. **The degree of the differential equation $\frac{d^2y}{dx^2} + \sin\frac{dy}{dx} = 0$ is:**
   A) 1 B) 2 C) 3 D) undefined

10. **A first-order and first-degree differential equation can be written in the form:**
    A) $\frac{dy}{dx} = f(x, y)$ B) $\frac{d^2y}{dx^2} = f(x, y)$ C) $y = f(x)$ only D) $x = f(y)$ only

11. **A solution that does not contain any arbitrary constant is called a:**
    A) general solution B) particular solution
    C) homogeneous solution D) separable solution

12. **A differential equation together with an initial condition is called a/an:**
    A) initial value problem B) algebraic problem
    C) degree problem D) boundary equation

13. **The general solution of differential equation $x\,dx + y\,dy = 0$ is:**
    A) $x + y = c$ B) $x^2 + y^2 = c$ C) $x^2 - y^2 = c$ D) $xy = c$

www.ilmkidunya.com

www.ilmkidunya.com

14. A differential equation is homogeneous if it can be written in the form:

A) $\frac{dy}{dx}=F\left(\frac{y}{x}\right)$ B) $\frac{dy}{dx}=F(x+y)$ C) $\frac{dy}{dx}=F(x-y)$ D) $\frac{dy}{dx}=F(xy)$

15. A differential equation $\frac{dy}{dx}=f(x,y)$ will be homogeneous if for every non-zero real number t:

A) $f(tx,ty)=f(x,y)$ B) $f(tx,ty)=tf(x,y)$

C) $f(tx,ty)=f(x,y)$ D) $f(tx,ty)=0$

16. The equation $\frac{dy}{dx}=\frac{x+y}{y-x}$ is:

A) homogeneous B) non-homogeneous

C) quadratic D) not a differential equation

17. For the equation $x^2(2y+1)dy-dx=0$, separation of variables gives:

A) $(y+1)dy=\frac{dx}{x^2}$ B) $x^2dy=(2y+1)dx$

C) $\frac{dy}{2y+1}=x^2dx$ D) $(2y+1)dx=x^2dy$

18. For the equation $x\tan y\left(\frac{dy}{dx}\right)-1=0$, which statement is correct?

A) $\frac{dy}{dx}=\tan\frac{y}{x}$ B) $\frac{dy}{dx}=\frac{1}{x\tan y}$

C) $\frac{dy}{dx}=x\tan y$ D) $\frac{dy}{dx}=\frac{x}{\tan y}$

19. A particle moves in a straight line with acceleration $a=2t-7$. If $v=10$ m/s when $t=0$, its velocity at time t is:

A) $v=t^2-7t+10$ B) $v=t^2-7t$

C) $v=2t^2-7t+10$ D) $v=2t-7$

20. A radioactive isotope has a half-life of 12 hours and an initial mass of 160 grams. How much remains after 36 hours?

A) 80 g B) 40 g C) 20 g D) 10 g

ANSWER KEY

1.	B	2.	C	3.	A	4.	C	5.	B	6.	A	7.	C	8.	B	9.	D	10.	A
11.	B	12.	A	13.	B	14.	A	15.	C	16.	A	17.	A	18.	B	19.	A	20.	C

www.ilmkidunya.com